Cambridge International AS & A Level

Cambridge Assessment International Education
Cambridge International Advanced Subsidiary and Advanced Level

PHYSICS **9702/33**

Paper 3 Advanced Practical Skills **February/March 2019**

CONFIDENTIAL INSTRUCTIONS

This document gives details of how to prepare for and administer the practical exam.

The information in this document and the identity of any materials supplied by Cambridge International are confidential and must NOT reach candidates either directly or indirectly.

The supervisor must complete the report at the end of this document and return it with the scripts.

If you have any queries regarding these confidential instructions, contact Cambridge International stating the centre number, the syllabus and component number and the nature of the query.

email info@cambridgeinternational.org
phone +44 1223 553554
fax +44 1223 553558

This document consists of **7** printed pages and **1** blank page.

DC (JM/SG) 164356/2
© UCLES 2019

Cambridge Assessment International Education

General information about practical exams

Centres must follow the guidance on science practical exams given in the *Cambridge Handbook*.

Safety

Supervisors must follow national and local regulations relating to safety and first aid.

Only those procedures described in the question paper should be attempted.

Supervisors must inform candidates that materials and apparatus used in the exam should be treated with caution. Suitable eye protection should be used where necessary.

Before the exam

- The packets containing the question papers must **not** be opened before the exam.
- It is assumed that standard school laboratory facilities, as indicated in the *Guide to Planning Practical Science*, will be available.
- Spare materials and apparatus for the tasks set must be available for candidates, if required.

During the exam

- It must be made clear to candidates at the start of the exam that they may request spare materials and apparatus for the tasks set.
- Where specified, the supervisor **must** perform the experiments and record the results as instructed. This must be done **out of sight** of the candidates, using the same materials and apparatus as the candidates.
- Any assistance provided to candidates must be recorded in the supervisor's report.
- If any materials or apparatus need to be replaced, for example, in the event of breakage or loss, this must be recorded in the supervisor's report.

After the exam

- The supervisor must complete a report for each practical session held and each laboratory used.
- Each packet of scripts returned to Cambridge International must contain the following items:
    - the scripts of the candidates specified on the bar code label provided
    - the supervisor's results relevant to these candidates
    - the supervisor's reports relevant to these candidates
    - seating plans for each practical session, referring to each candidate by candidate number
    - the attendance register.

© UCLES 2019

Specific information for this practical exam

The supervisor must be a teacher of Physics or other competent physicist. During the exam, the supervisor (NOT the invigilator) should obtain a sample set of numerical results by following the relevant steps in the question paper. The results should be clearly labelled 'Supervisor's results' and recorded on the supervisor's report or on a spare copy of the question paper.

Organisation of the exam

- The number of sets of apparatus provided for each experiment should be $\frac{1}{2}N$, where N is the number of candidates taking the exam.
- Candidates should not be provided with any additional apparatus beyond that specified in these instructions.
- Candidates should be allowed access to the apparatus for each experiment for one hour only.
- After spending one hour on one experiment, candidates should change over to the other experiment.
- The order in which a candidate attempts the two experiments is immaterial.

Assistance to candidates

- Candidates should be informed that, if they find themselves in real difficulty, they may ask the supervisor for practical assistance, but that the extent of this assistance will be reported to the Examiner, who may not award full credit for the relevant skills.
- Assistance should only be given when it is asked for by a candidate or where apparatus is seen to have developed a fault.
- Assistance should be restricted to enabling candidates to make observations and measurements. Observations and measurements must **not** be made for candidates, and no help should be given with data analysis or evaluation.
- In cases of faulty apparatus that prevent the required measurements being taken, the supervisor should allow extra time to give the candidate a fair opportunity to perform the experiment as if the fault had not been present.
- Any assistance or extra time given to candidates must be recorded in the supervisor's report.

Question 1

Apparatus requirements (per set of apparatus unless otherwise specified)

- Straight wooden strip of length 50 cm with a cross-section approximately 2 cm × 1 cm. See Note 1.
- Two 100 g slotted masses. See Note 2.
- Stand, boss and clamp.
- Flat-headed nail of diameter 2.0 mm to 2.5 mm and approximate length 6 cm. It must be possible for the strip to swing freely on the nail through a hole.
- Stopwatch reading to 0.1 s or better.
- 180° protractor with 1° divisions.
- 30 cm ruler with a millimetre scale.

Notes

1 A small mark should be made with a fine marker pen at the mid-point of the wooden strip. The mark should be labelled C.
Nine 3.0 mm diameter holes should be drilled through the strip in the positions shown in Fig. 1.1. The holes should be perpendicular to the length of the strip.

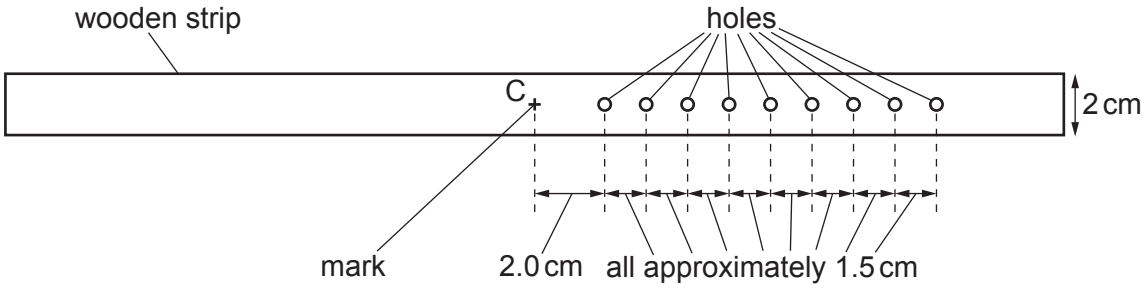

Fig. 1.1

2 The masses should be fixed to the ends of the wooden strip using woodscrews, as shown in Fig. 1.2.

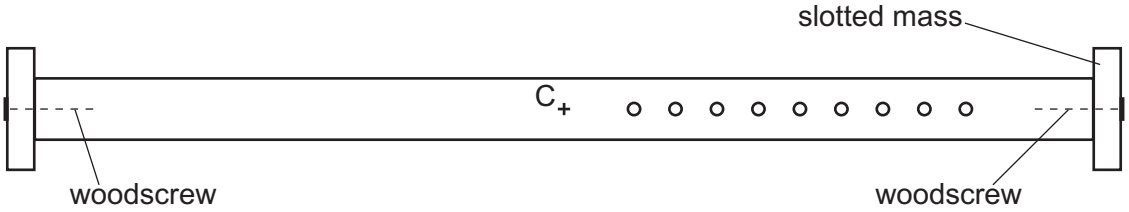

Fig. 1.2

3 The apparatus should be laid out on the bench. If the apparatus is to be used by another candidate, then it should be restored to its original state.

Question 2

Apparatus requirements (per set of apparatus unless otherwise specified)

- Two rubber balloons of the same colour and with the shape shown in Fig. 2.1.
  The approximate uninflated diameter X should be 4 cm. See Note 1.
- Shallow tray with approximate dimensions 40 cm × 30 cm and 6 cm deep (to hold the balloons).
- 50 g of modelling clay (e.g. Plasticine).
- Transparent Perspex refraction block with approximate dimensions 11 cm × 6 cm × 1.5 cm. A glass block of similar size may be used. See Note 2.
- 250 ml beaker half filled with water.
- Paper towel or kitchen roll.
- 30 cm ruler with a millimetre scale.
- Set square.
- Card showing the mass of the refraction block to the nearest g, as shown in Fig. 2.2.

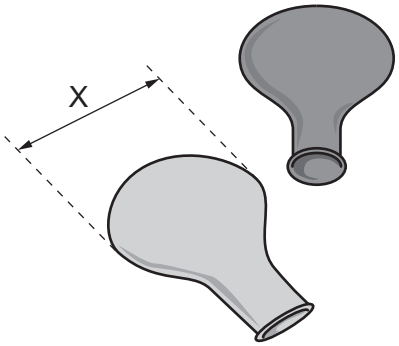

Fig. 2.1

Mass of transparent block m = 119 g

Fig. 2.2

Notes

1 One of the balloons should be inflated to an approximate diameter 4 times the uninflated diameter X and the neck tied in a knot to seal it. The other should be inflated to an approximate diameter 1.5 times the uninflated diameter X and the neck tied in a knot to seal it.

2 A handle made from adhesive tape should be securely stuck onto one end of the transparent block as shown in Fig. 2.3. It should be possible to pick up the block using this handle.

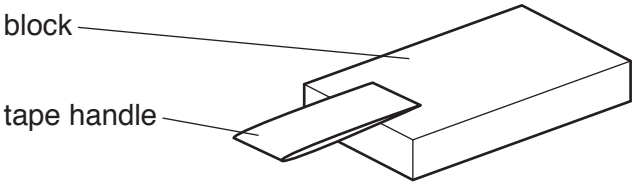

Fig. 2.3

3 The apparatus should be laid out on the bench. If the apparatus is to be used by another candidate, then it should be restored to its original state. New balloons should be provided.

BLANK PAGE

Permission to reproduce items where third-party owned material protected by copyright is included has been sought and cleared where possible. Every reasonable effort has been made by the publisher (UCLES) to trace copyright holders, but if any items requiring clearance have unwittingly been included, the publisher will be pleased to make amends at the earliest possible opportunity.

To avoid the issue of disclosure of answer-related information to candidates, all copyright acknowledgements are reproduced online in the Cambridge Assessment International Education Copyright Acknowledgements Booklet. This is produced for each series of examinations and is freely available to download at www.cambridgeinternational.org after the live examination series.

Cambridge Assessment International Education is part of the Cambridge Assessment Group. Cambridge Assessment is the brand name of the University of Cambridge Local Examinations Syndicate (UCLES), which itself is a department of the University of Cambridge.

© UCLES 2019

Supervisor's report

Syllabus and component number | | | | | / | | |

Centre number | | | | | |

Centre name .....

Time of the practical session .....

Laboratory name/number .....

Give details of any difficulties experienced by the centre or by candidates (include the relevant candidate names and candidate numbers).

You must include:

- any difficulties experienced by the centre in the preparation of materials
- any difficulties experienced by candidates, e.g. due to faulty materials or apparatus
- any specific assistance given to candidates.

Declaration

1 Each packet that I am returning to Cambridge International contains the following items:

- ☐ the scripts of the candidates specified on the bar code label provided
- ☐ the supervisor's results relevant to these candidates
- ☐ the supervisor's reports relevant to these candidates
- ☐ seating plans for each practical session, referring to each candidate by candidate number
- ☐ the attendance register

2 Where the practical exam has taken place in more than one practical session, I have clearly labelled the supervisor's results, supervisor's reports and seating plans with the time and laboratory name/number for that practical session.

3 I have included details of difficulties relating to this practical session experienced by the centre or by candidates.

4 I have reported any other adverse circumstances affecting candidates, e.g. illness, bereavement or temporary injury, directly to Cambridge International on a *special consideration form*.

Signed ..... (supervisor)

Name (in block capitals) .....

© UCLES 2019