Cambridge International AS & A Level

Cambridge Assessment International Education
Cambridge International Advanced Subsidiary and Advanced Level

CANDIDATE NAME	

CENTRE NUMBER						CANDIDATE NUMBER					

5054159878

PHYSICS **9702/22**

Paper 2 AS Level Structured Questions **February/March 2019**

1 hour 15 minutes

Candidates answer on the Question Paper.

No Additional Materials are required.

READ THESE INSTRUCTIONS FIRST

Write your centre number, candidate number and name on all the work you hand in.
Write in dark blue or black pen.
You may use an HB pencil for any diagrams or graphs.
Do not use staples, paper clips, glue or correction fluid.
DO **NOT** WRITE IN ANY BARCODES.

Answer **all** questions.

Electronic calculators may be used.
You may lose marks if you do not show your working or if you do not use appropriate units.

At the end of the examination, fasten all your work securely together.
The number of marks is given in brackets [ ] at the end of each question or part question.

This document consists of **15** printed pages and **1** blank page.

DC (RW/SW) 162371/4
© UCLES 2019

Cambridge Assessment International Education

Data

speed of light in free space	$c = 3.00 \times 10^{8}\,\mathrm{m\,s^{-1}}$
permeability of free space	$\mu_0 = 4\pi \times 10^{-7}\,\mathrm{H\,m^{-1}}$
permittivity of free space	$\varepsilon_0 = 8.85 \times 10^{-12}\,\mathrm{F\,m^{-1}}$
	$(\frac{1}{4\pi\varepsilon_0} = 8.99 \times 10^{9}\,\mathrm{m\,F^{-1}})$
elementary charge	$e = 1.60 \times 10^{-19}\,\mathrm{C}$
the Planck constant	$h = 6.63 \times 10^{-34}\,\mathrm{J\,s}$
unified atomic mass unit	$1\,\mathrm{u} = 1.66 \times 10^{-27}\,\mathrm{kg}$
rest mass of electron	$m_e = 9.11 \times 10^{-31}\,\mathrm{kg}$
rest mass of proton	$m_p = 1.67 \times 10^{-27}\,\mathrm{kg}$
molar gas constant	$R = 8.31\,\mathrm{J\,K^{-1}\,mol^{-1}}$
the Avogadro constant	$N_A = 6.02 \times 10^{23}\,\mathrm{mol^{-1}}$
the Boltzmann constant	$k = 1.38 \times 10^{-23}\,\mathrm{J\,K^{-1}}$
gravitational constant	$G = 6.67 \times 10^{-11}\,\mathrm{N\,m^{2}\,kg^{-2}}$
acceleration of free fall	$g = 9.81\,\mathrm{m\,s^{-2}}$

© UCLES 2019

Formulae

uniformly accelerated motion	$s = ut + \frac{1}{2}at^2$ $v^2 = u^2 + 2as$
work done on/by a gas	$W = p\Delta V$
gravitational potential	$\phi = -\frac{Gm}{r}$
hydrostatic pressure	$p = \rho gh$
pressure of an ideal gas	$p = \frac{1}{3}\frac{Nm}{V}\langle c^2\rangle$
simple harmonic motion	$a = -\omega^2 x$
velocity of particle in s.h.m.	$v = v_0 \cos \omega t$ $v = \pm \omega \sqrt{(x_0^2 - x^2)}$
Doppler effect	$f_o = \frac{f_s v}{v \pm v_s}$
electric potential	$V = \frac{Q}{4\pi\varepsilon_0 r}$
capacitors in series	$1/C = 1/C_1 + 1/C_2 + \ldots$
capacitors in parallel	$C = C_1 + C_2 + \ldots$
energy of charged capacitor	$W = \frac{1}{2}QV$
electric current	$I = Anvq$
resistors in series	$R = R_1 + R_2 + \ldots$
resistors in parallel	$1/R = 1/R_1 + 1/R_2 + \ldots$
Hall voltage	$V_H = \frac{BI}{ntq}$
alternating current/voltage	$x = x_0 \sin \omega t$
radioactive decay	$x = x_0 \exp(-\lambda t)$
decay constant	$\lambda = \frac{0.693}{t_{\frac{1}{2}}}$

BLANK PAGE

Answer **all** the questions in the spaces provided.

1 **(a)** The ampere, metre and second are SI base units.

State **two** other SI base units.

1. .....

2. .....
[2]

(b) The average drift speed v of electrons moving through a metal conductor is given by the equation:

$$v = \frac{\mu F}{e}$$

where e is the charge on an electron
F is a force acting on the electron
and μ is a constant.

Determine the SI base units of μ.

SI base units .....[3]

[Total: 5]

2 **(a)** Define:

(i) *displacement*

.....

.....[1]

(ii) *acceleration*.

.....

.....[1]

(b) A man wearing a wingsuit glides through the air with a constant velocity of $47\,\mathrm{m\,s^{-1}}$ at an angle of 24° to the horizontal. The path of the man is shown in Fig. 2.1.

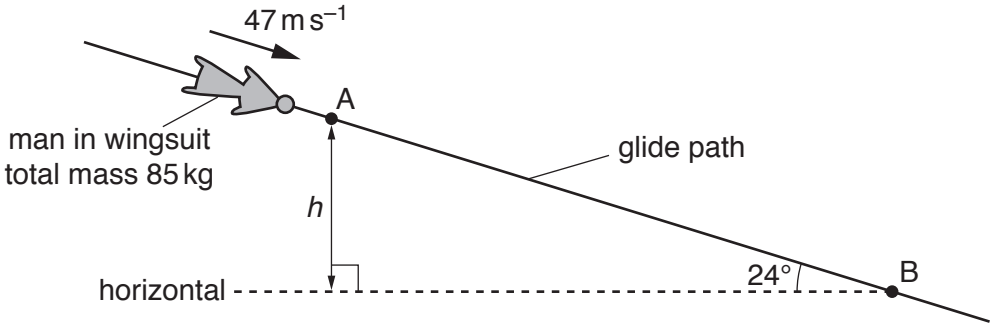

Fig. 2.1 (not to scale)

The total mass of the man and the wingsuit is 85 kg. The man takes a time of 2.8 minutes to glide from point A to point B.

(i) With reference to the motion of the man, state and explain whether he is in equilibrium.

.....

.....

.....

.....[2]

(ii) Show that the difference in height *h* between points A and B is 3200 m.

[1]

(iii) For the movement of the man from A to B, determine:

1. the decrease in gravitational potential energy

decrease in gravitational potential energy = ... J [2]

2. the magnitude of the force on the man due to air resistance.

force = ... N [2]

(iv) The pressure of the still air at A is 63 kPa and at B is 92 kPa. Assume the density of the air is constant between A and B.

Determine the density of the air between A and B.

density = ... $kg\,m^{-3}$ [2]

[Total: 11]

3 Two balls, X and Y, move along a horizontal frictionless surface, as illustrated in Fig. 3.1.

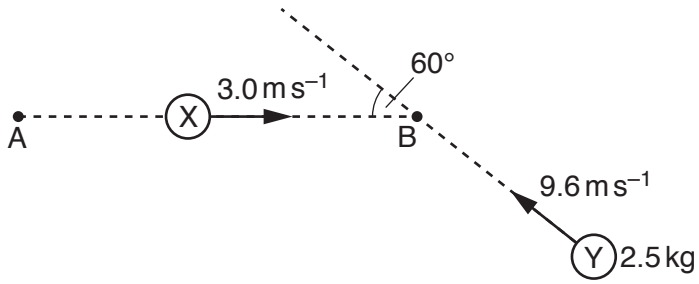

Fig. 3.1 (not to scale)

Ball X has an initial velocity of $3.0\,\mathrm{m\,s^{-1}}$ in a direction along line AB. Ball Y has a mass of 2.5 kg and an initial velocity of $9.6\,\mathrm{m\,s^{-1}}$ in a direction at an angle of 60° to line AB.

The two balls collide at point B. The balls stick together and then travel along the horizontal surface in a direction at right-angles to the line AB, as shown in Fig. 3.2.

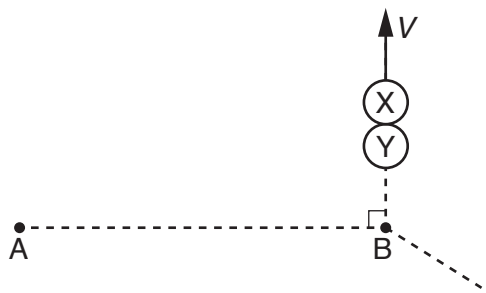

Fig. 3.2

(a) By considering the components of momentum in the direction from A to B, show that ball X has a mass of 4.0 kg.

[2]

(b) Calculate the common speed V of the two balls after the collision.

V = ... $m\,s^{-1}$ [2]

(c) Determine the difference between the initial kinetic energy of ball X and the initial kinetic energy of ball Y.

difference in kinetic energy = ... J [2]

[Total: 6]

4 **(a)** Define *electric field strength*.

.....

.....[1]

(b) Two very small metal spheres X and Y are connected by an insulating rod of length 72 mm. A side view of this arrangement is shown in Fig. 4.1.

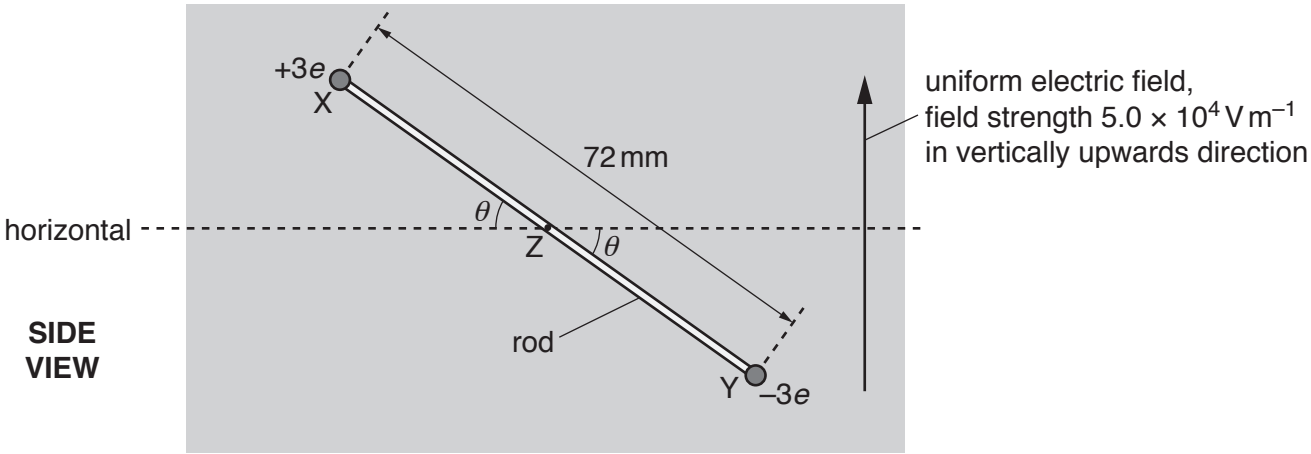

Fig. 4.1 (not to scale)

Sphere X has a charge of +3*e* and sphere Y has a charge of –3*e*, where *e* is the elementary charge. The rod is held at its mid point Z at an angle θ to the horizontal. The rod and spheres have negligible mass and are in a uniform electric field. The electric field strength is $5.0 \times 10^4\,\text{V m}^{-1}$. The direction of this field is vertically upwards.

(i) The electric field is produced by applying a potential difference of 4.0 kV between two charged parallel metal plates.

1. Calculate the separation between the plates.

separation = ... m [2]

2. Describe the arrangement of the two plates. Include in your answer a statement of the sign of the charge on each plate. You may draw on Fig. 4.1.

.....

.....

.....

.....[2]

(ii) Determine the magnitude and direction of the force on sphere Y.

magnitude = ... N

direction .....
[2]

(iii) The electric forces acting on the two spheres form a couple. This couple acts on the rod with a torque of 6.2×10^{-16} N m.

Calculate the angle θ of the rod to the horizontal.

θ = ... ° [2]

[Total: 9]

5 **(a)** By reference to two waves, state:

(i) the principle of superposition

.....

.....

.....

.....[2]

(ii) what is meant by *coherence*.

.....

.....[1]

(b) Two coherent waves P and Q meet at a point in phase and superpose. Wave P has an amplitude of 1.5 cm and intensity I. The resultant intensity at the point where the waves meet is $3I$.

Calculate the amplitude of wave Q.

amplitude = ... cm [2]

(c) The apparatus shown in Fig. 5.1 is used to produce an interference pattern on a screen.

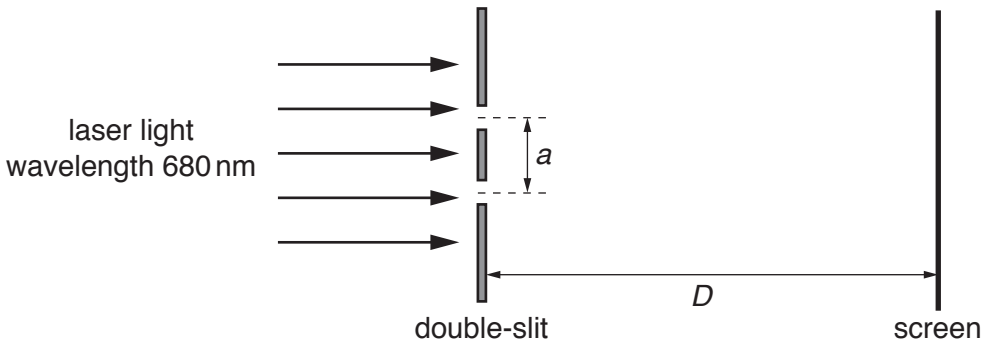

Fig. 5.1 (not to scale)

Light of wavelength 680 nm is incident on a double-slit. The slit separation is *a*. The separation between adjacent fringes is *x*. Fringes are viewed on a screen at distance *D* from the double-slit.

Distance D is varied from 2.0 m to 3.5 m. The variation with D of x is shown in Fig. 5.2.

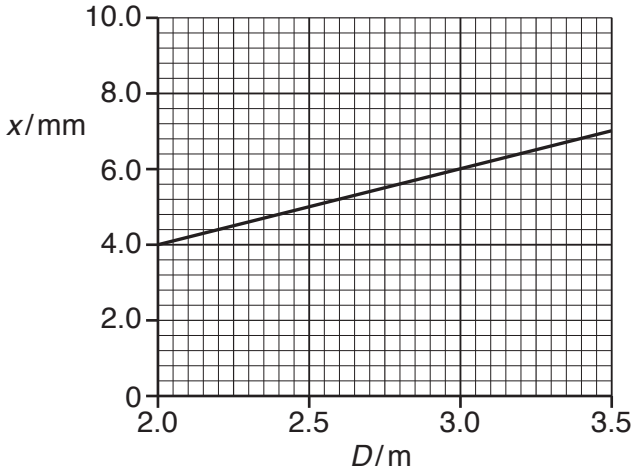

Fig. 5.2

(i) Use Fig. 5.2 to determine the slit separation a.

a = ... m [3]

(ii) The laser is now replaced by another laser that emits light of a shorter wavelength.

On Fig. 5.2, sketch a possible line to show the variation with D of x for the fringes that are now produced. [2]

[Total: 10]

6 **(a)** Using energy transformations, describe the *electromotive force* (*e.m.f.*) of a battery and the *potential difference* (*p.d.*) across a resistor.

e.m.f.: .....

.....

p.d.: .....

.....[2]

(b) A battery of e.m.f. 6.0 V and negligible internal resistance is connected to a network of resistors and a voltmeter, as shown in Fig. 6.1.

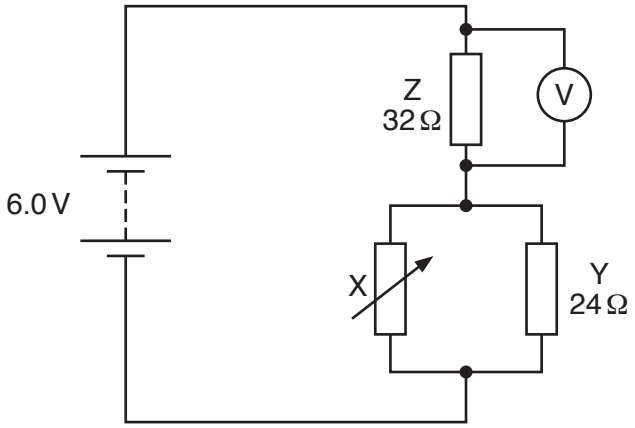

Fig. 6.1

Resistor Y has a resistance of 24 Ω and resistor Z has a resistance of 32 Ω.

(i) The resistance R_X of the variable resistor X is adjusted until the voltmeter reads 4.8 V.

Calculate:

1. the current in resistor Z

current = ... A [1]

2. the total power provided by the battery

power = ... W [2]

3. the number of conduction electrons that move through the battery in a time interval of 25 s

number = ... [2]

4. the total resistance of X and Y connected in parallel

total resistance = ... Ω [2]

5. the resistance R_X.

R_X = ... Ω [2]

(ii) The resistance R_X is now decreased.

State and explain the change, if any, to the reading on the voltmeter.

.....

.....

.....[2]

[Total: 13]

7 **(a)** The names of four particles are listed below.

alpha beta-plus neutron proton

State the name(s) of the particle(s) in this list that:

(i) are not fundamental

.....[1]

(ii) do not experience an electric force when situated in an electric field

.....[1]

(iii) has the largest ratio of charge to mass.

.....[1]

(b) A hadron has a charge of $+e$ where e is the elementary charge. The hadron is composed of only two quarks. One of these quarks is an antidown ($\bar{d}$) quark. By considering charge, state and explain the name (flavour) of the other quark.

.....

.....[3]

[Total: 6]

Permission to reproduce items where third-party owned material protected by copyright is included has been sought and cleared where possible. Every reasonable effort has been made by the publisher (UCLES) to trace copyright holders, but if any items requiring clearance have unwittingly been included, the publisher will be pleased to make amends at the earliest possible opportunity.

To avoid the issue of disclosure of answer-related information to candidates, all copyright acknowledgements are reproduced online in the Cambridge Assessment International Education Copyright Acknowledgements Booklet. This is produced for each series of examinations and is freely available to download at www.cambridgeinternational.org after the live examination series.

Cambridge Assessment International Education is part of the Cambridge Assessment Group. Cambridge Assessment is the brand name of the University of Cambridge Local Examinations Syndicate (UCLES), which itself is a department of the University of Cambridge.

© UCLES 2019