Cambridge International AS & A Level

Cambridge International Examinations
Cambridge International Advanced Subsidiary and Advanced Level

CANDIDATE NAME	

CENTRE NUMBER						CANDIDATE NUMBER				

4464915981

PHYSICS **9702/33**

Paper 3 Advanced Practical Skills 1 **February/March 2018**

2 hours

Candidates answer on the Question Paper.

Additional Materials: As listed in the Confidential Instructions.

READ THESE INSTRUCTIONS FIRST

Write your Centre number, candidate number and name on all the work you hand in.
Write in dark blue or black pen.
You may use an HB pencil for any diagrams or graphs.
Do not use staples, paper clips, glue or correction fluid.
DO **NOT** WRITE IN ANY BARCODES.

Answer **both** questions.
You will be allowed to work with the apparatus for a maximum of one hour for each question.
You are expected to record all your observations as soon as these observations are made, and to plan the presentation of the records so that it is not necessary to make a fair copy of them.
You are reminded of the need for good English and clear presentation in your answers.

Electronic calculators may be used.
You may lose marks if you do not show your working or if you do not use appropriate units.

Additional answer paper and graph paper should be used only if it becomes necessary to do so.

At the end of the examination, fasten all your work securely together.
The number of marks is given in brackets [ ] at the end of each question or part question.

For Examiner's Use	
1	
2	
Total	

This document consists of **10** printed pages and **2** blank pages.

© UCLES 2018

BLANK PAGE

You may not need to use all of the materials provided.

1 In this experiment you will investigate an electrical circuit.

You are provided with several groups of resistors connected in parallel.

(a) • Select a group of resistors and assemble the circuit shown in Fig. 1.1.

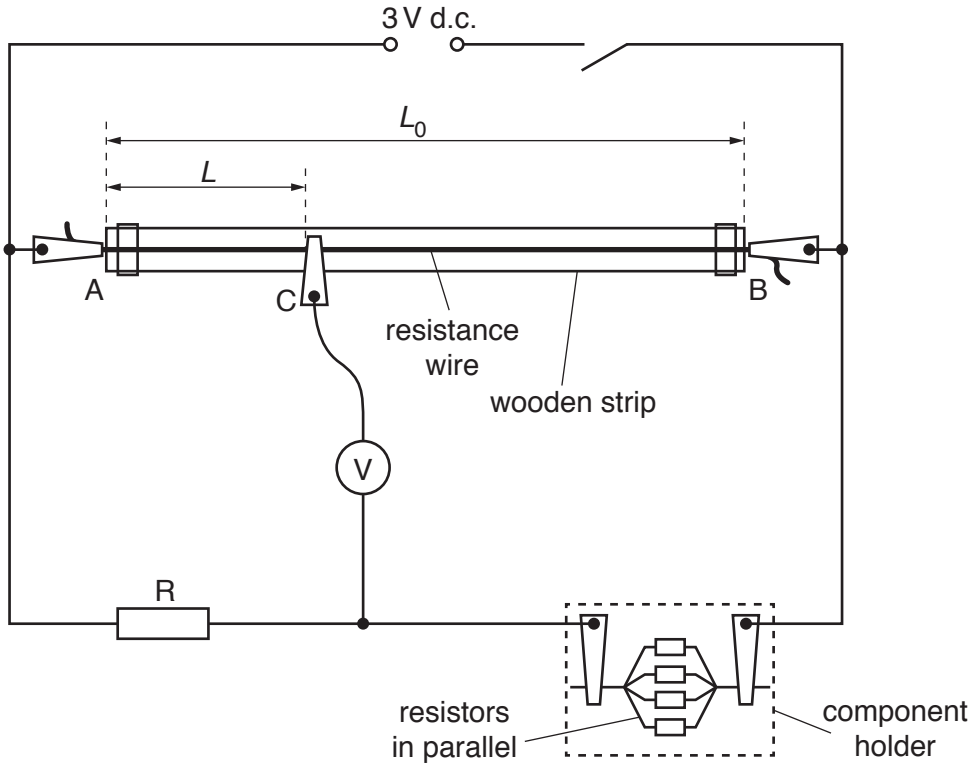

Fig. 1.1

A, B and C are crocodile clips.

• Measure and record the length L_0 of the resistance wire between the ends of A and B, as shown in Fig. 1.1.

L_0 = ... [1]

(b) • Record the number n of resistors in parallel connected in the component holder.

n = ...

• Close the switch.

• Move C along the wire until the voltmeter reading is zero.

• Measure and record the distance L between A and C when the voltmeter reading is zero, as shown in Fig. 1.1.

L = ... [1]

• Open the switch.

(c) Select a different group of resistors and repeat **(b)** until you have at least six sets of values of n and L.
Record your results in a table.
Include values of $\frac{1}{n}$ and $\frac{1}{L}$ in your table.

[10]

(d) **(i)** Plot a graph of $\frac{1}{L}$ on the y-axis against $\frac{1}{n}$ on the x-axis. [3]

(ii) Draw the straight line of best fit. [1]

(iii) Determine the gradient and the y-intercept of this line.

gradient = ...

y-intercept = ...

[2]

(e) It is suggested that the quantities L and n are related by the equation

$$\frac{1}{L} = \frac{a}{n} + b$$

where a and b are constants.

Use your answers in **(d)(iii)** to determine the values of a and b.
Give appropriate units.

a = ...

b = ...
[2]

[Total: 20]

You may not need to use all of the materials provided.

2 In this experiment, you will investigate the size of a drop of liquid between two glass or perspex plates.

(a) You are provided with two pieces of wire, each labelled A, and two pieces of wire, each labelled B.
Measure and record the diameter d_A of one the pieces of wire labelled A, and the diameter d_B of one of the pieces of wire labelled B.

d_A = ...

d_B = ...
[2]

(b) • Place the larger glass or Perspex plate on top of the piece of graph paper, as shown in Fig. 2.1.

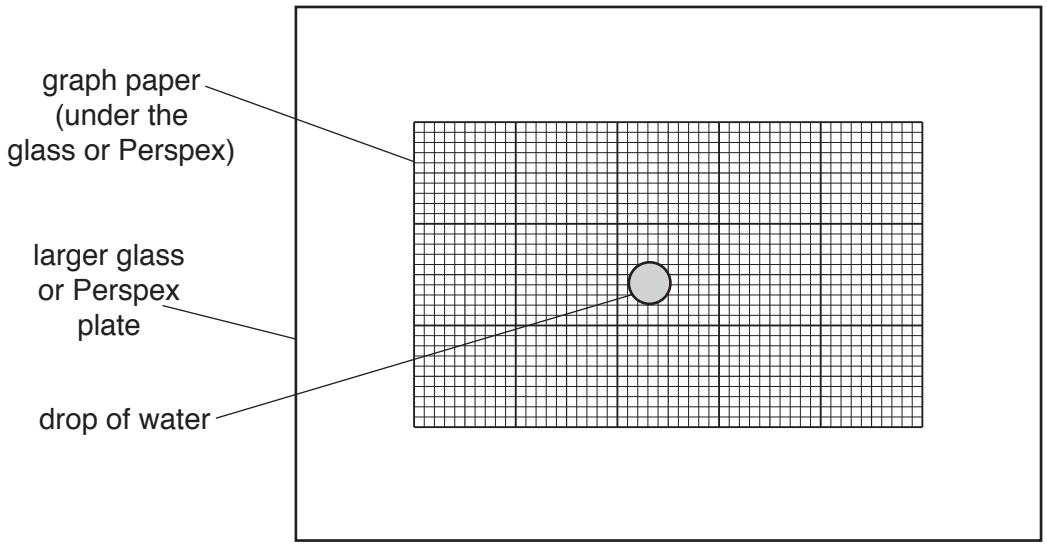

Fig. 2.1

• Fill the liquid dropper with water from the beaker. Use the dropper to put a single drop of water on the plate, as shown in Fig. 2.1.

- Place the four pieces of wire on the larger plate in the approximate positions shown in Fig. 2.2. The wires must not be touching each other.

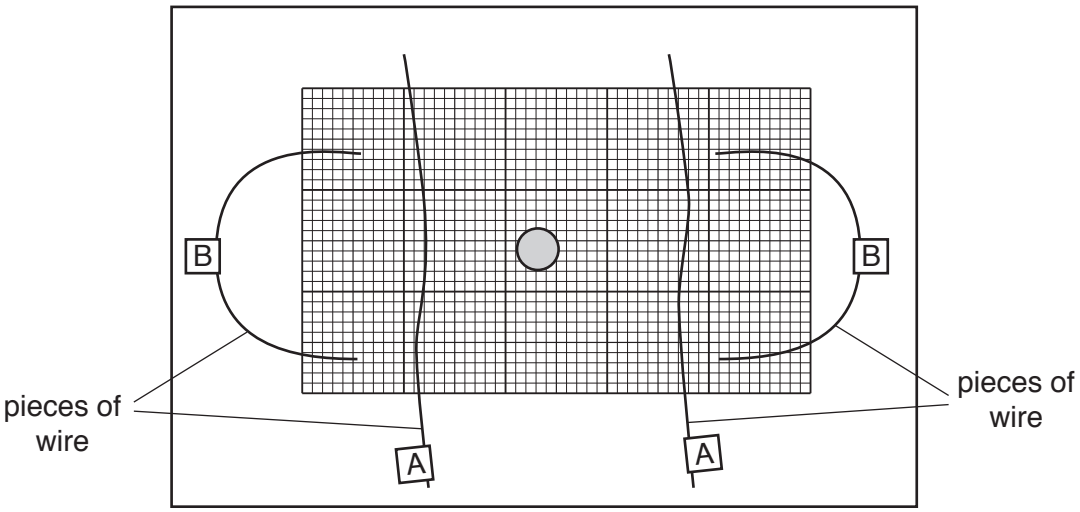

Fig. 2.2

- Place the smaller glass or Perspex plate on top of the wires as shown in Fig. 2.3.

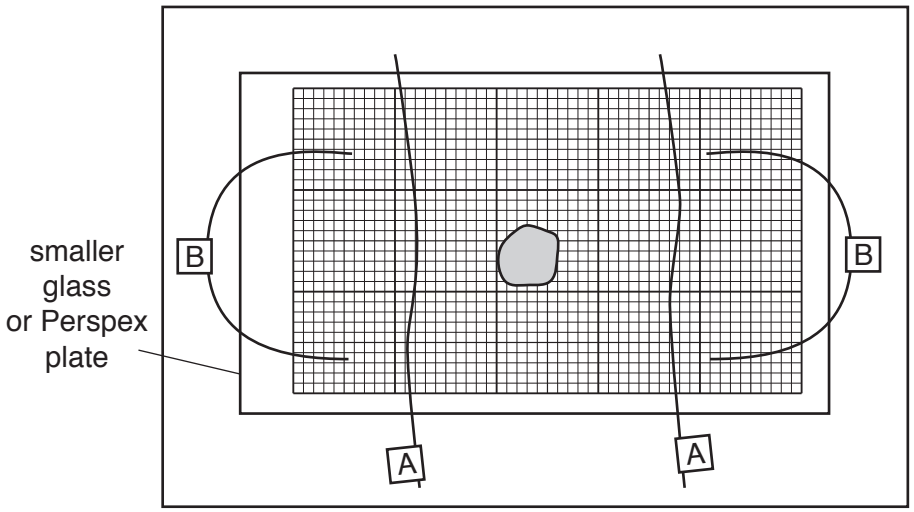

Fig. 2.3

- Gently press the smaller plate down onto the wires labelled B.
  Use the 2 mm graph grid to determine the average width W_B of your water drop.

W_B = ... [1]

(c) Estimate the percentage uncertainty in your value of W_B.

percentage uncertainty = ... [1]

(d) • Holding the smaller plate in position, carefully pull out the two wires labelled B (leaving the wires labelled A) as shown in Fig. 2.4.

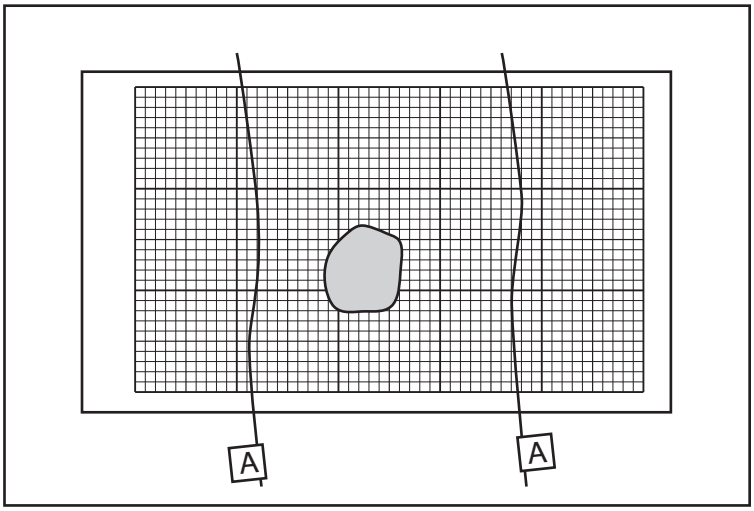

Fig. 2.4

• Gently press the smaller plate down onto the wires labelled A.
Use the 2 mm graph grid to determine the average width W_A of your water drop.

W_A = ... [2]

(e) • Remove the smaller plate and the wires.

• Use a paper towel to remove all water from both plates.

• Repeat **(b)** and **(d)** using a larger drop of water made using two drops from the liquid dropper.

W_B = ... [2]

W_A = ... [1]

(f) **(i)** It is suggested that the relationship between d_A, d_B, W_B and W_A is

$$\frac{d_A}{d_B} = k\left(\frac{W_B}{W_A}\right)^2$$

where k is a constant.

Using your data, calculate **two** values of k.

first value of k = ...

second value of k = ...
[1]

(ii) Justify the number of significant figures you have given for your values of k.

.....

.....

..... [1]

(iii) Explain whether your results in **(f)(i)** support the suggested relationship.

.....

.....

.....

.....[1]

(g) **(i)** Describe **four** sources of uncertainty or limitations of the procedure for this experiment.

1. .....

.....

2. .....

.....

3. .....

.....

4. .....

.....

[4]

(ii) Describe **four** improvements that could be made to this experiment. You may suggest the use of other apparatus or different procedures.

1. .....

.....

2. .....

.....

3. .....

.....

4. .....

.....

[4]

[Total: 20]

© UCLES 2018

BLANK PAGE

Permission to reproduce items where third-party owned material protected by copyright is included has been sought and cleared where possible. Every reasonable effort has been made by the publisher (UCLES) to trace copyright holders, but if any items requiring clearance have unwittingly been included, the publisher will be pleased to make amends at the earliest possible opportunity.

To avoid the issue of disclosure of answer-related information to candidates, all copyright acknowledgements are reproduced online in the Cambridge International Examinations Copyright Acknowledgements Booklet. This is produced for each series of examinations and is freely available to download at www.cie.org.uk after the live examination series.

Cambridge International Examinations is part of the Cambridge Assessment Group. Cambridge Assessment is the brand name of University of Cambridge Local Examinations Syndicate (UCLES), which is itself a department of the University of Cambridge.

© UCLES 2018