Cambridge International AS & A Level

Cambridge International Examinations
Cambridge International Advanced Subsidiary and Advanced Level

CANDIDATE NAME	

CENTRE NUMBER						CANDIDATE NUMBER					

* 4 8 9 5 7 8 6 9 6 2 *

PHYSICS **9702/22**

Paper 2 AS Level Structured Questions **February/March 2017**

1 hour 15 minutes

Candidates answer on the Question Paper.

No Additional Materials are required.

READ THESE INSTRUCTIONS FIRST

Write your Centre number, candidate number and name on all the work you hand in.
Write in dark blue or black pen.
You may use an HB pencil for any diagrams or graphs.
Do not use staples, paper clips, glue or correction fluid.
DO **NOT** WRITE IN ANY BARCODES.

Answer **all** questions.

Electronic calculators may be used.
You may lose marks if you do not show your working or if you do not use appropriate units.

At the end of the examination, fasten all your work securely together.
The number of marks is given in brackets [ ] at the end of each question or part question.

This document consists of **16** printed pages and **4** blank pages.

DC (NH/SW) 127083/4
© UCLES 2017

CAMBRIDGE International Examinations

Data

speed of light in free space	$c = 3.00 \times 10^{8}\,\mathrm{m\,s^{-1}}$
permeability of free space	$\mu_0 = 4\pi \times 10^{-7}\,\mathrm{H\,m^{-1}}$
permittivity of free space	$\varepsilon_0 = 8.85 \times 10^{-12}\,\mathrm{F\,m^{-1}}$
	$(\frac{1}{4\pi\varepsilon_0} = 8.99 \times 10^{9}\,\mathrm{m\,F^{-1}})$
elementary charge	$e = 1.60 \times 10^{-19}\,\mathrm{C}$
the Planck constant	$h = 6.63 \times 10^{-34}\,\mathrm{J\,s}$
unified atomic mass unit	$1\,\mathrm{u} = 1.66 \times 10^{-27}\,\mathrm{kg}$
rest mass of electron	$m_e = 9.11 \times 10^{-31}\,\mathrm{kg}$
rest mass of proton	$m_p = 1.67 \times 10^{-27}\,\mathrm{kg}$
molar gas constant	$R = 8.31\,\mathrm{J\,K^{-1}\,mol^{-1}}$
the Avogadro constant	$N_A = 6.02 \times 10^{23}\,\mathrm{mol^{-1}}$
the Boltzmann constant	$k = 1.38 \times 10^{-23}\,\mathrm{J\,K^{-1}}$
gravitational constant	$G = 6.67 \times 10^{-11}\,\mathrm{N\,m^{2}\,kg^{-2}}$
acceleration of free fall	$g = 9.81\,\mathrm{m\,s^{-2}}$

© UCLES 2017

Formulae

uniformly accelerated motion	$s = ut + \frac{1}{2}at^2$ $v^2 = u^2 + 2as$
work done on/by a gas	$W = p\Delta V$
gravitational potential	$\phi = -\frac{Gm}{r}$
hydrostatic pressure	$p = \rho gh$
pressure of an ideal gas	$p = \frac{1}{3}\frac{Nm}{V}\langle c^2\rangle$
simple harmonic motion	$a = -\omega^2 x$
velocity of particle in s.h.m.	$v = v_0 \cos \omega t$ $v = \pm \omega \sqrt{(x_0^2 - x^2)}$
Doppler effect	$f_o = \frac{f_s v}{v \pm v_s}$
electric potential	$V = \frac{Q}{4\pi\varepsilon_0 r}$
capacitors in series	$1/C = 1/C_1 + 1/C_2 + \ldots$
capacitors in parallel	$C = C_1 + C_2 + \ldots$
energy of charged capacitor	$W = \frac{1}{2}QV$
electric current	$I = Anvq$
resistors in series	$R = R_1 + R_2 + \ldots$
resistors in parallel	$1/R = 1/R_1 + 1/R_2 + \ldots$
Hall voltage	$V_H = \frac{BI}{ntq}$
alternating current/voltage	$x = x_0 \sin \omega t$
radioactive decay	$x = x_0 \exp(-\lambda t)$
decay constant	$\lambda = \frac{0.693}{t_{\frac{1}{2}}}$

Answer **all** the questions in the spaces provided.

1 **(a)** Complete Fig. 1.1 by putting a tick (✓) in the appropriate column to indicate whether the listed quantities are scalars or vectors.

quantity	scalar	vector
acceleration		
force		
kinetic energy		
momentum		
power		
work		

Fig. 1.1 [2]

(b) A floating sphere is attached by a cable to the bottom of a river, as shown in Fig. 1.2.

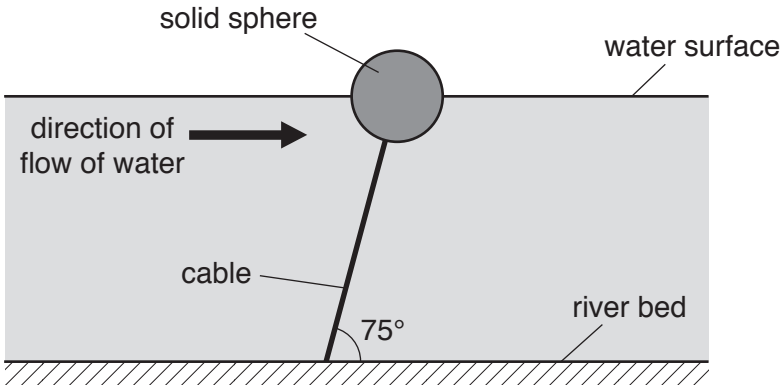

Fig. 1.2

The sphere is in equilibrium, with the cable at an angle of 75° to the horizontal. Assume that the force on the sphere due to the water flow is in the horizontal direction.

The radius of the sphere is 23 cm. The sphere is solid and is made from a material of density $82\,kg\,m^{-3}$.

(i) Show that the weight of the sphere is 41 N.

[2]

(ii) The tension in the cable is 290 N.

Determine the upthrust acting on the sphere.

upthrust = ... N [2]

(iii) Explain the origin of the upthrust acting on the sphere.

.....

.....

.....[1]

[Total: 7]

2 **(a)** State the *principle of conservation of momentum*.

.....

.....

.....[2]

(b) Two blocks, A and B, are on a horizontal frictionless surface. The blocks are joined together by a spring, as shown in Fig. 2.1.

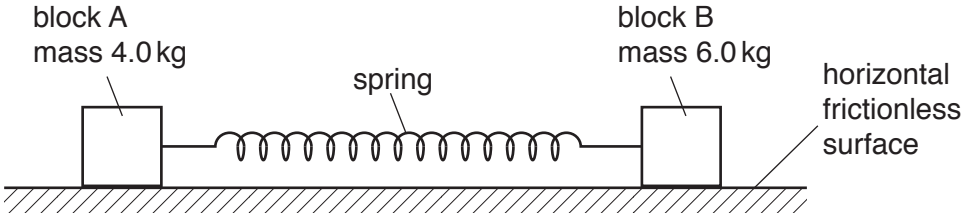

Fig. 2.1

Block A has mass 4.0 kg and block B has mass 6.0 kg.

The variation of the tension *F* with the extension *x* of the spring is shown in Fig. 2.2.

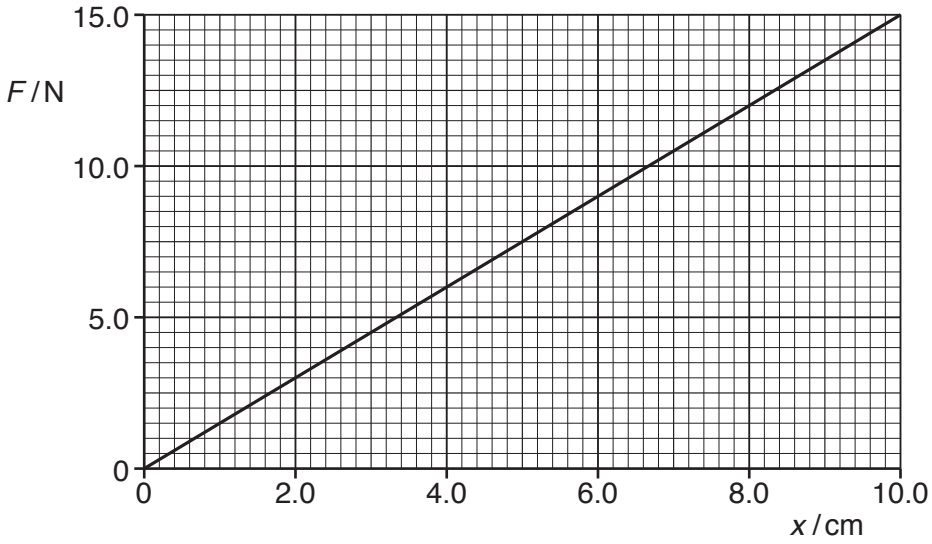

Fig. 2.2

The two blocks are held apart so that the spring has an extension of 8.0 cm.

(i) Show that the elastic potential energy of the spring at an extension of 8.0 cm is 0.48 J.

[2]

(ii) The blocks are released from rest at the same instant. When the extension of the spring becomes zero, block A has speed v_A and block B has speed v_B.

For the instant when the extension of the spring becomes zero,

1. use conservation of momentum to show that

$$\frac{\text{kinetic energy of block A}}{\text{kinetic energy of block B}} = 1.5$$

[3]

2. use the information in **(b)(i)** and **(b)(ii)1** to determine the kinetic energy of block A. It may be assumed that the spring has negligible kinetic energy and that air resistance is negligible.

kinetic energy of block A = ... J [2]

(iii) The blocks are released at time $t = 0$.

On Fig. 2.3, sketch a graph to show how the momentum of block A varies with time t until the extension of the spring becomes zero.
Numerical values of momentum and time are not required.

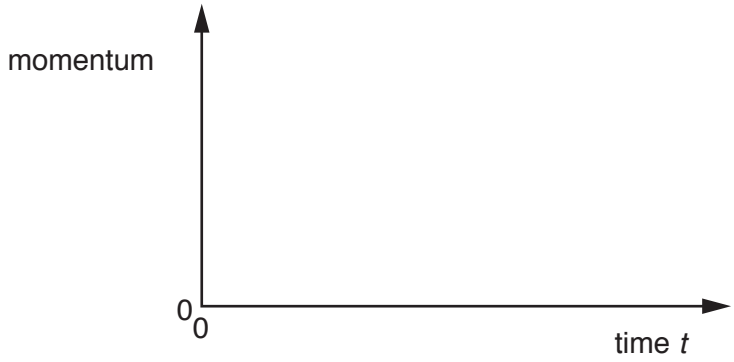

Fig. 2.3

[2]

[Total: 11]

BLANK PAGE

3 **(a)** Define *velocity*.

.....

.....[1]

(b) A car travels in a straight line up a slope, as shown in Fig. 3.1.

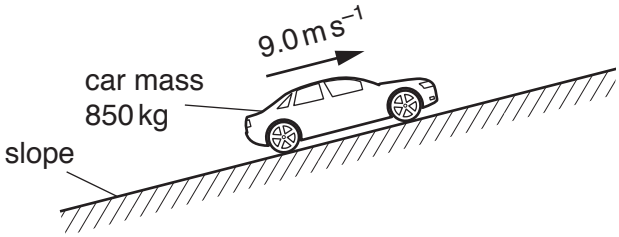

Fig. 3.1

The car has mass 850 kg and travels with a constant speed of $9.0\,\mathrm{m\,s^{-1}}$. The car's engine exerts a force on the car of 2.0 kN up the slope.

A resistive force F_D, due to friction and air resistance, opposes the motion of the car.

The variation of F_D with the speed v of the car is shown in Fig. 3.2.

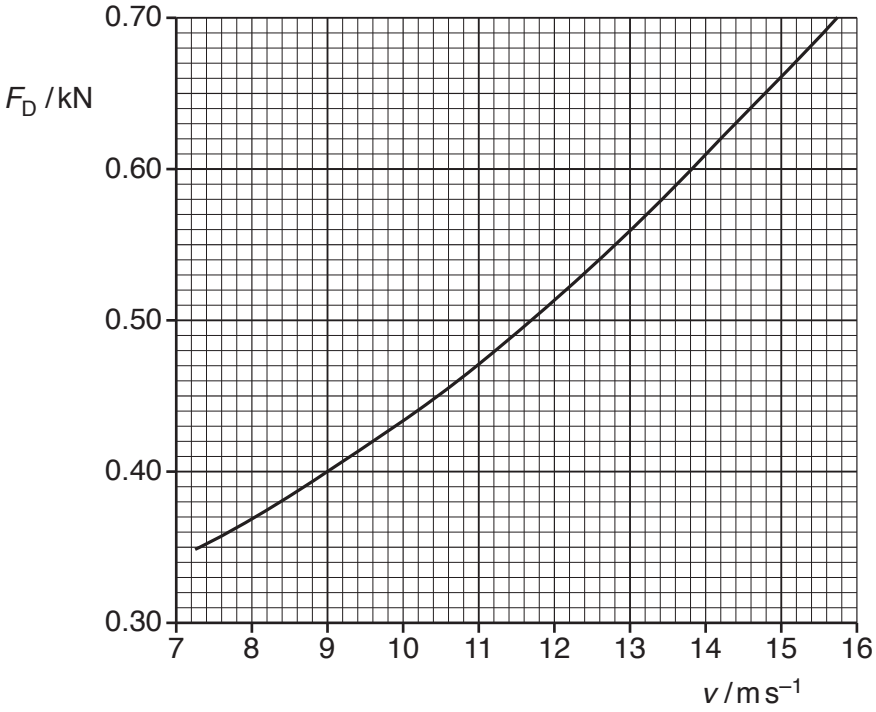

Fig. 3.2

(i) State and explain whether the car is in equilibrium as it moves up the slope.

.....

.....

.....[2]

(ii) Consider the forces that act along the slope. Use data from Fig. 3.2 to determine the component of the weight of the car that acts down the slope.

component of weight = ... N [2]

(iii) Show that the power output of the car is 1.8×10^4 W.

[2]

(iv) The car now travels along horizontal ground. The output power of the car is maintained at 1.8×10^4 W. The variation of the resistive force F_D acting on the car is given in Fig. 3.2.

Calculate the acceleration of the car when its speed is $15\,\mathrm{m\,s^{-1}}$.

acceleration = ...$\mathrm{m\,s^{-2}}$ [3]

[Total: 10]

BLANK PAGE

4 **(a)** State what is meant by the *Doppler effect*.

.....

.....

.....[2]

(b) A child sits on a rotating horizontal platform in a playground. The child moves with a constant speed along a circular path, as illustrated in Fig. 4.1.

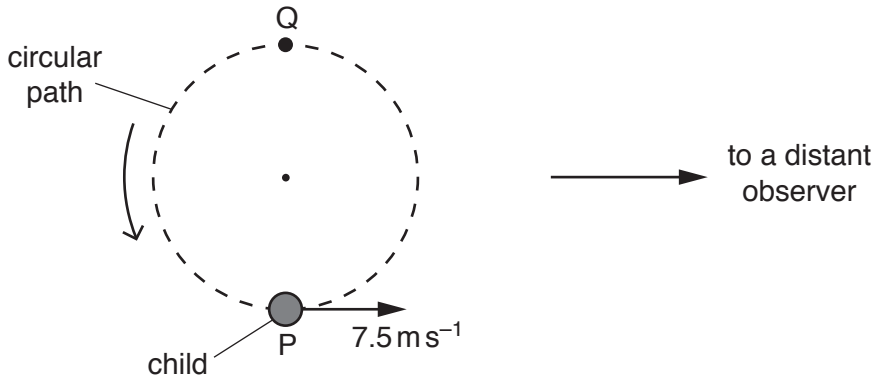

Fig. 4.1

An observer is standing a long distance away from the child. During one particular revolution, the child, moving at a speed of $7.5\,\text{m}\,\text{s}^{-1}$, starts blowing a whistle at point P and stops blowing it at point Q on the circular path.

The whistle emits sound of frequency 950 Hz. The speed of sound in air is $330\,\text{m}\,\text{s}^{-1}$.

(i) Determine the maximum frequency of the sound heard by the distant observer.

maximum frequency = ... Hz [2]

(ii) Describe the variation in the frequency of the sound heard by the distant observer.

.....

.....

.....

.....[2]

[Total: 6]

5 An electron is travelling in a straight line through a vacuum with a constant speed of $1.5 \times 10^7\,\mathrm{m\,s^{-1}}$. The electron enters a uniform electric field at point A, as shown in Fig. 5.1.

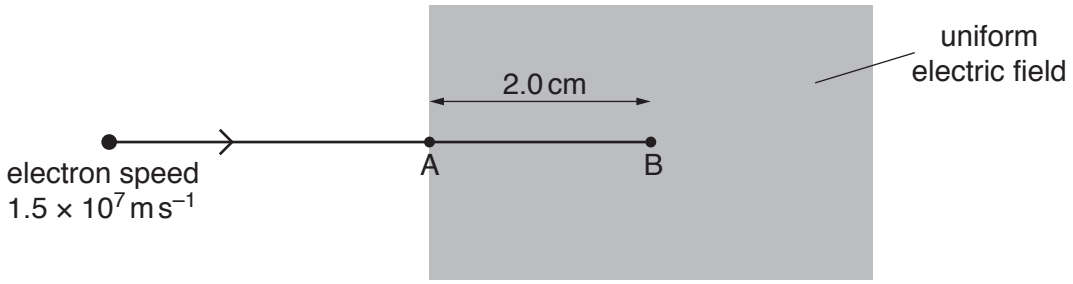

Fig. 5.1

The electron continues to move in the same direction until it is brought to rest by the electric field at point B. Distance AB is 2.0 cm.

(a) State the direction of the electric field.

.....[1]

(b) Calculate the magnitude of the deceleration of the electron in the field.

deceleration = ...$\mathrm{m\,s^{-2}}$ [2]

(c) Calculate the electric field strength.

electric field strength = ...$\mathrm{V\,m^{-1}}$ [3]

(d) The electron is at point A at time $t = 0$.

On Fig. 5.2, sketch the variation with time t of the velocity v of the electron until it reaches point B. Numerical values of v and t do not need to be shown.

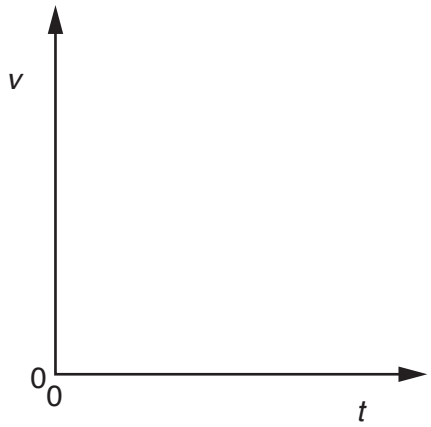

Fig. 5.2

[1]

[Total: 7]

6 **(a)** Three resistors of resistances R_1, R_2 and R_3 are connected as shown in Fig. 6.1.

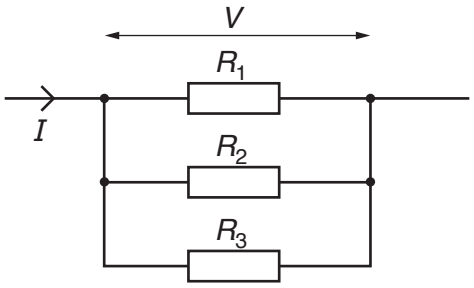

Fig. 6.1

The total current in the combination of resistors is I and the potential difference across the combination is V.

Show that the total resistance R of the combination is given by the equation

$$\frac{1}{R} = \frac{1}{R_1} + \frac{1}{R_2} + \frac{1}{R_3}.$$

[2]

(b) A battery of electromotive force (e.m.f.) 6.0 V and internal resistance r is connected to a resistor of resistance 12 Ω and a variable resistor X, as shown in Fig. 6.2.

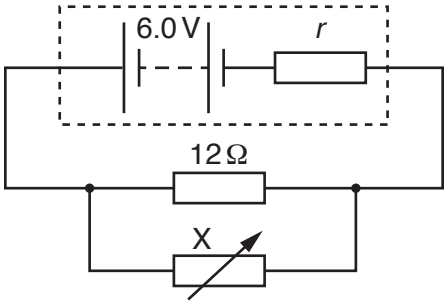

Fig. 6.2

(i) By considering energy, explain why the potential difference across the battery's terminals is less than the e.m.f. of the battery.

.....

.....

.....

.....[2]

(ii) A charge of 2.5 kC passes through the battery.

Calculate

1. the total energy transformed by the battery,

energy = ...J [2]

2. the number of electrons that pass through the battery.

number = ...[1]

(iii) The combined resistance of the two resistors connected in parallel is 4.8 Ω.

Calculate the resistance of X.

resistance of X = ...Ω [1]

(iv) Use your answer in **(b)(iii)** to determine the ratio

$$\frac{\text{power dissipated in X}}{\text{power dissipated in 12 Ω resistor}}.$$

ratio = ...[2]

(v) The resistance of X is now decreased. Explain why the power produced by the battery is increased.

.....

.....

.....[1]

[Total: 11]

7 A nucleus of bismuth-212 ($^{212}_{83}Bi$) decays by the emission of an α-particle and γ-radiation.

(a) State the number of protons and the number of neutrons in the nucleus of bismuth-212.

number of protons = ...

number of neutrons = ...
[1]

(b) The γ-radiation emitted from the nucleus has a wavelength of 3.8 pm.

Calculate the frequency of this radiation.

frequency = ... Hz [3]

(c) Explain how a single beam of α-particles and γ-radiation may be separated into a beam of α-particles and a beam of γ-radiation.

.....

.....

.....

.....[2]

(d) The α-particle emitted from the bismuth nucleus has an initial kinetic energy of 9.3×10^{-13} J. As the α-particle moves through air it causes the removal of electrons from atoms. The α-particle loses energy and is stopped after removing 1.8×10^{5} electrons as it moved through the air.

Determine the energy, in eV, needed to remove one electron.

energy = ... eV [2]

[Total: 8]

© UCLES 2017

BLANK PAGE

BLANK PAGE

Permission to reproduce items where third-party owned material protected by copyright is included has been sought and cleared where possible. Every reasonable effort has been made by the publisher (UCLES) to trace copyright holders, but if any items requiring clearance have unwittingly been included, the publisher will be pleased to make amends at the earliest possible opportunity.

To avoid the issue of disclosure of answer-related information to candidates, all copyright acknowledgements are reproduced online in the Cambridge International Examinations Copyright Acknowledgements Booklet. This is produced for each series of examinations and is freely available to download at www.cie.org.uk after the live examination series.

Cambridge International Examinations is part of the Cambridge Assessment Group. Cambridge Assessment is the brand name of University of Cambridge Local Examinations Syndicate (UCLES), which is itself a department of the University of Cambridge.

© UCLES 2017