Cambridge Assessment International Education

Cambridge International AS & A Level

CANDIDATE NAME	

CENTRE NUMBER						CANDIDATE NUMBER					

0862578481

PHYSICS **9702/42**

Paper 4 A Level Structured Questions **February/March 2023**

2 hours

You must answer on the question paper.

No additional materials are needed.

INSTRUCTIONS

- Answer **all** questions.
- Use a black or dark blue pen. You may use an HB pencil for any diagrams or graphs.
- Write your name, centre number and candidate number in the boxes at the top of the page.
- Write your answer to each question in the space provided.
- Do **not** use an erasable pen or correction fluid.
- Do **not** write on any bar codes.
- You may use a calculator.
- You should show all your working and use appropriate units.

INFORMATION

- The total mark for this paper is 100.
- The number of marks for each question or part question is shown in brackets [ ].

This document has **32** pages. Any blank pages are indicated.

DC (CJ/JG) 333162/4
© UCLES 2023

Data

acceleration of free fall	$g = 9.81\ \mathrm{m\,s^{-2}}$
speed of light in free space	$c = 3.00 \times 10^{8}\ \mathrm{m\,s^{-1}}$
elementary charge	$e = 1.60 \times 10^{-19}\ \mathrm{C}$
unified atomic mass unit	$1\ \mathrm{u} = 1.66 \times 10^{-27}\ \mathrm{kg}$
rest mass of proton	$m_p = 1.67 \times 10^{-27}\ \mathrm{kg}$
rest mass of electron	$m_e = 9.11 \times 10^{-31}\ \mathrm{kg}$
Avogadro constant	$N_A = 6.02 \times 10^{23}\ \mathrm{mol^{-1}}$
molar gas constant	$R = 8.31\ \mathrm{J\,K^{-1}\,mol^{-1}}$
Boltzmann constant	$k = 1.38 \times 10^{-23}\ \mathrm{J\,K^{-1}}$
gravitational constant	$G = 6.67 \times 10^{-11}\ \mathrm{N\,m^{2}\,kg^{-2}}$
permittivity of free space	$\varepsilon_0 = 8.85 \times 10^{-12}\ \mathrm{F\,m^{-1}}$ $\left(\frac{1}{4\pi\varepsilon_0} = 8.99 \times 10^{9}\ \mathrm{m\,F^{-1}}\right)$
Planck constant	$h = 6.63 \times 10^{-34}\ \mathrm{J\,s}$
Stefan–Boltzmann constant	$\sigma = 5.67 \times 10^{-8}\ \mathrm{W\,m^{-2}\,K^{-4}}$

Formulae

uniformly accelerated motion	$s = ut + \frac{1}{2}at^2$ $v^2 = u^2 + 2as$
hydrostatic pressure	$\Delta p = \rho g \Delta h$
upthrust	$F = \rho g V$
Doppler effect for sound waves	$f_o = \dfrac{f_s v}{v \pm v_s}$
electric current	$I = Anvq$
resistors in series	$R = R_1 + R_2 + \ldots$
resistors in parallel	$\dfrac{1}{R} = \dfrac{1}{R_1} + \dfrac{1}{R_2} + \ldots$

© UCLES 2023

gravitational potential	$\phi = -\frac{GM}{r}$
gravitational potential energy	$E_P = -\frac{GMm}{r}$
pressure of an ideal gas	$p = \frac{1}{3}\frac{Nm}{V}\langle c^2\rangle$
simple harmonic motion	$a = -\omega^2 x$
velocity of particle in s.h.m.	$v = v_0 \cos \omega t$ $v = \pm \omega \sqrt{(x_0^2 - x^2)}$
electric potential	$V = \frac{Q}{4\pi\varepsilon_0 r}$
electrical potential energy	$E_P = \frac{Qq}{4\pi\varepsilon_0 r}$
capacitors in series	$\frac{1}{C} = \frac{1}{C_1} + \frac{1}{C_2} + ...$
capacitors in parallel	$C = C_1 + C_2 + ...$
discharge of a capacitor	$x = x_0 e^{-\frac{t}{RC}}$
Hall voltage	$V_H = \frac{BI}{ntq}$
alternating current/voltage	$x = x_0 \sin \omega t$
radioactive decay	$x = x_0 e^{-\lambda t}$
decay constant	$\lambda = \frac{0.693}{t_{\frac{1}{2}}}$
intensity reflection coefficient	$\frac{I_R}{I_0} = \frac{(Z_1 - Z_2)^2}{(Z_1 + Z_2)^2}$
Stefan–Boltzmann law	$L = 4\pi\sigma r^2 T^4$
Doppler redshift	$\frac{\Delta\lambda}{\lambda} \approx \frac{\Delta f}{f} \approx \frac{v}{c}$

1 **(a)** Define gravitational potential at a point.

.....

.....

..... [2]

(b) Artemis is a spherical planet that may be assumed to be isolated in space. The variation with distance x from the centre of Artemis of the gravitational potential ϕ is shown in Fig. 1.1.

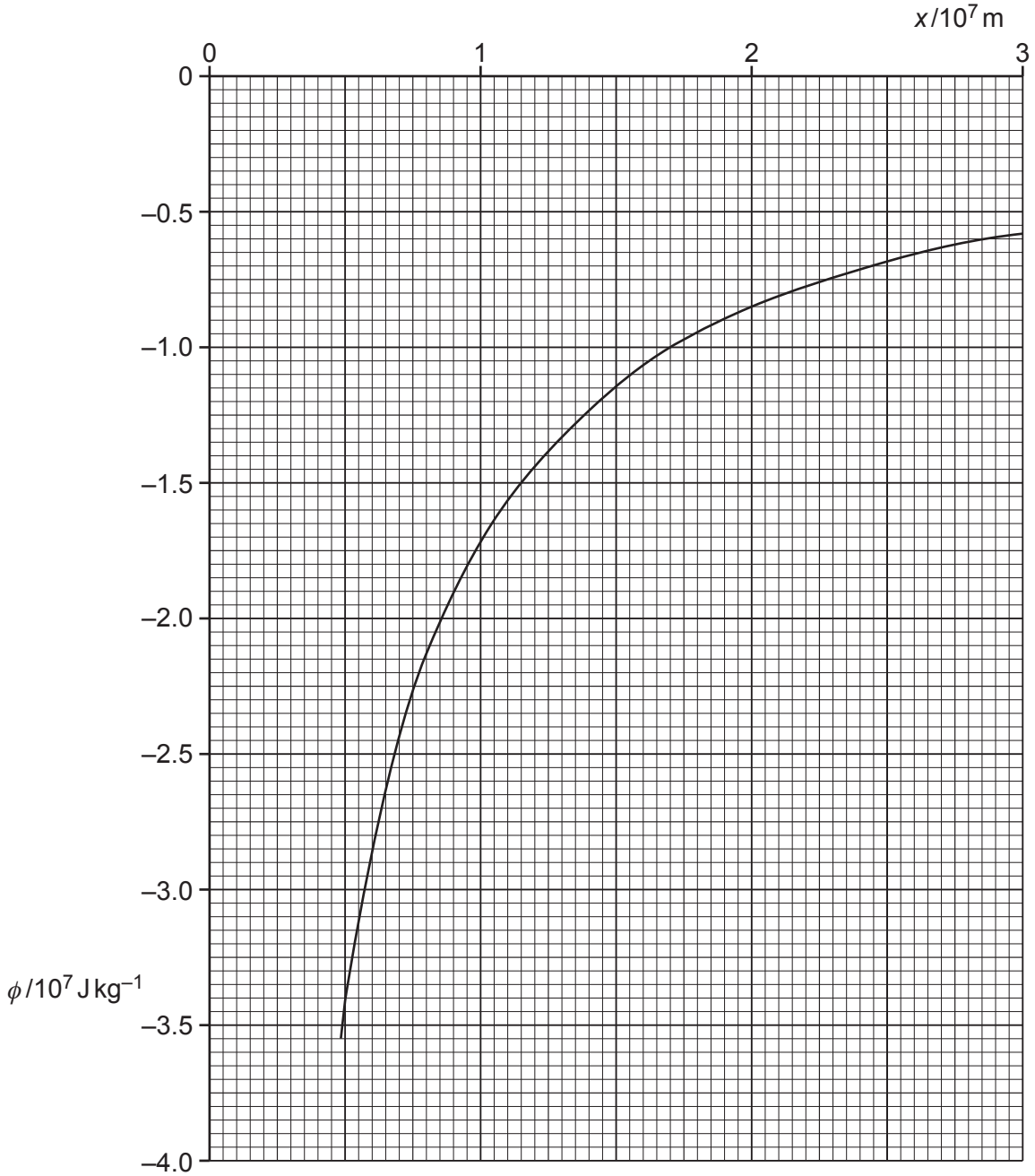

Fig. 1.1

(i) The radius of Artemis is 4800 km.

Determine the value of ϕ on the surface of Artemis.

ϕ = ... $J\,kg^{-1}$ [1]

(ii) Show that the mass of Artemis is 2.55×10^{24} kg.

[1]

(iii) Calculate the gravitational field strength g on the surface of Artemis.

g = ... $N\,kg^{-1}$ [2]

(iv) A satellite is in an orbit at a fixed position above a point on the surface of Artemis. The satellite is located above the equator of Artemis at a height above the surface where the gravitational potential is $-0.65 \times 10^{7}\,J\,kg^{-1}$.

Calculate the period, in hours, of rotation of Artemis.

period = ... hours [4]

(c) State **one** similarity and **one** difference between gravitational potential due to a point mass and electric potential due to a point charge.

similarity .....

.....

difference .....

.....
[2]

[Total: 12]

BLANK PAGE

2 **(a)** State what is meant by an ideal gas.

.....

.....

..... [2]

(b) A fixed amount of helium gas is sealed in a container. The helium gas has a pressure of 1.10×10^5 Pa, and a volume of $540\,cm^3$ at a temperature of 27 °C.

The volume of the container is rapidly decreased to $30.0\,cm^3$. The pressure of the helium gas increases to 6.70×10^6 Pa and its temperature increases to 742 °C, as illustrated in Fig. 2.1.

initial state	final state
1.10×10^5 Pa	6.70×10^6 Pa
$540\,cm^3$	$30.0\,cm^3$
27 °C	742 °C

Fig. 2.1

No thermal energy enters or leaves the helium gas during this process.

(i) Show that the helium gas behaves as an ideal gas.

[2]

(ii) The first law of thermodynamics may be expressed as

$$\Delta U = q + W.$$

Use the first law of thermodynamics to explain why the temperature of the helium gas increases.

.....

.....

.....

.....

..... [2]

(iii) The average translational kinetic energy E_K of a molecule of an ideal gas is given by

$$E_K = \frac{3}{2}kT$$

where k is the Boltzmann constant and T is the thermodynamic temperature.

Calculate the change in the total kinetic energy of the molecules of the helium gas.

change in kinetic energy = ... J [3]

(c) The mass of nitrogen gas in another container is 24.0 g at a temperature of 27 °C. The gas is cooled to its boiling point of –196 °C. Assume all the gas condenses to a liquid.

For this change the specific heat capacity of nitrogen gas is 1.04 $kJ\,kg^{-1}\,K^{-1}$.

The specific latent heat of vaporisation of nitrogen is 199 $kJ\,kg^{-1}$.

Determine the thermal energy, in kJ, removed from the nitrogen gas.

energy = ... kJ [3]

[Total: 12]

3 An object is suspended from a vertical spring as shown in Fig. 3.1.

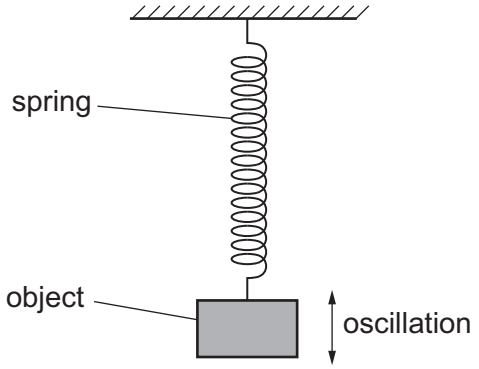

Fig. 3.1

The object is displaced vertically and then released so that it oscillates, undergoing simple harmonic motion.

Fig. 3.2 shows the variation with displacement x of the energy E of the oscillations.

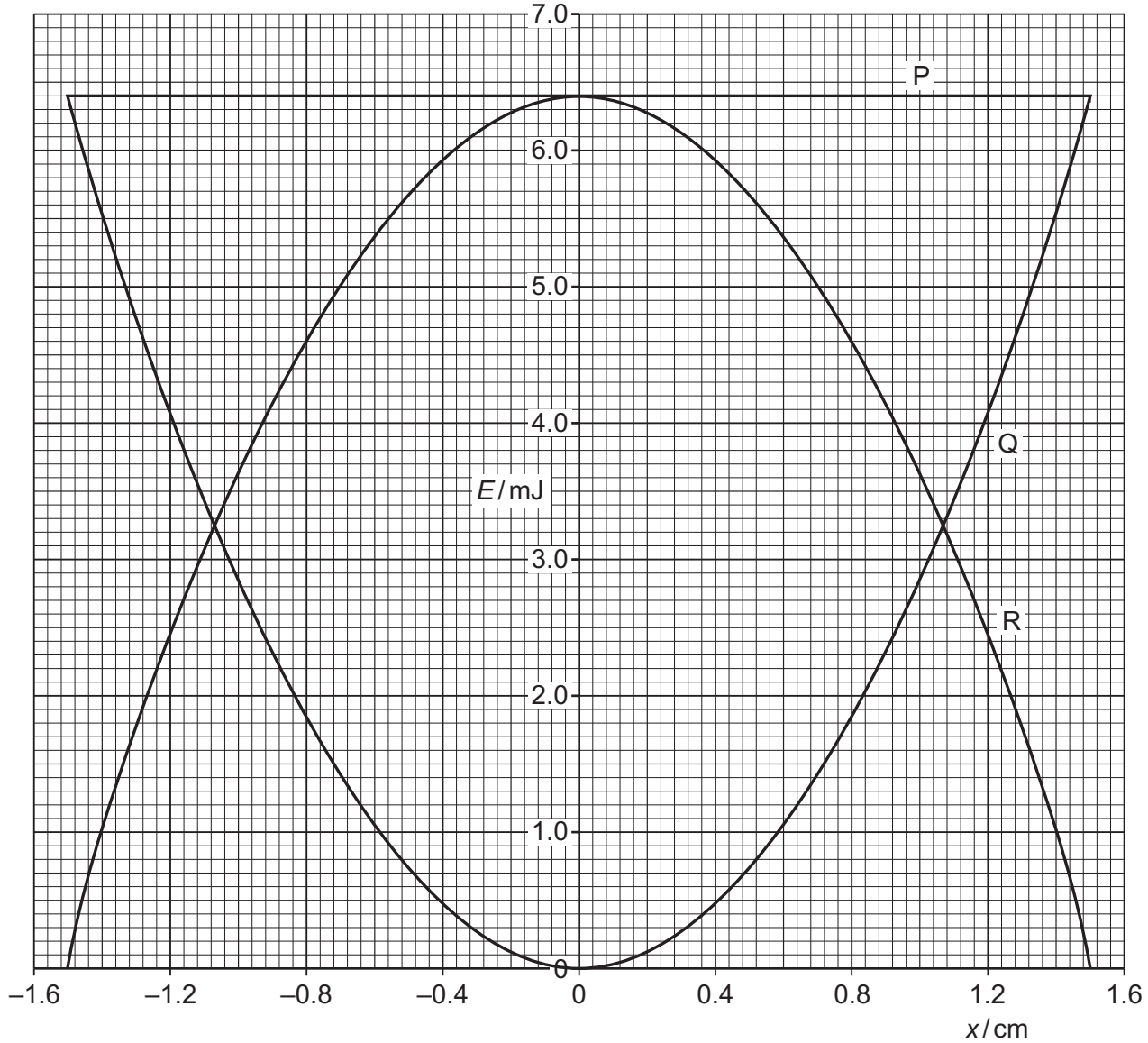

Fig. 3.2

The kinetic energy, the potential energy and the total energy of the oscillations are each represented by one of the lines P, Q and R.

(a) State the energy that is represented by each of the lines P, Q and R.

P .....

Q .....

R .....
[2]

(b) The object has a mass of 130 g.
Determine the period of the oscillations.

period = ... s [4]

(c) **(i)** State the cause of damping.

.....

..... [1]

(ii) A light card is attached to the object. The object is displaced with the same initial amplitude and then released. During each complete oscillation the total energy of the system decreases by 8.0% of the total energy at the start of that oscillation.

Determine the decrease in total energy, in mJ, of the system by the end of the first 6 complete oscillations.

energy lost = ... mJ [2]

(iii) State, with a reason, the type of damping that the card introduces into the system.

.....

.....

..... [1]

[Total: 10]

BLANK PAGE

4 **(a)** State Coulomb's law.

.....

.....

.....

..... [2]

(b) A charged sphere X is supported on an insulating stand. A second charged sphere Y is suspended by an insulating thread so that sphere Y is in equilibrium at the position shown in Fig. 4.1.

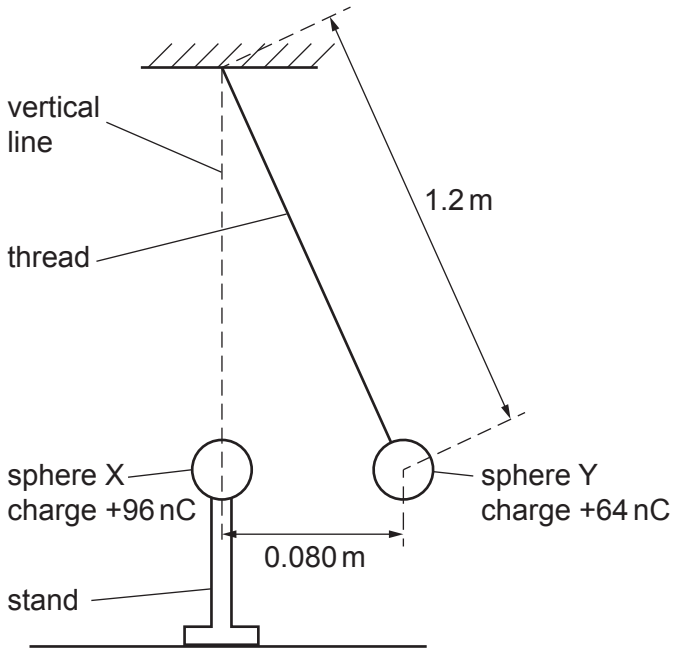

Fig. 4.1

The charge on sphere X is +96 nC and the charge on sphere Y is +64 nC.
Assume that the spheres behave as point charges.

The length of the thread is 1.2 m and the centres of sphere X and sphere Y are separated horizontally by a distance of 0.080 m.

(i) On Fig. 4.2, draw and label all the forces acting on sphere Y.

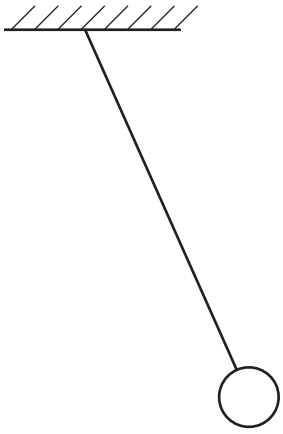

Fig. 4.2

[1]

(ii) Determine the mass of sphere Y.

mass = ... kg [4]

(iii) Calculate the total electric potential energy stored between X and Y.

energy = ... J [1]

(c) An electron enters the region between two parallel plates P and Q, that are separated by a distance of 18 mm, as shown in Fig. 4.3.

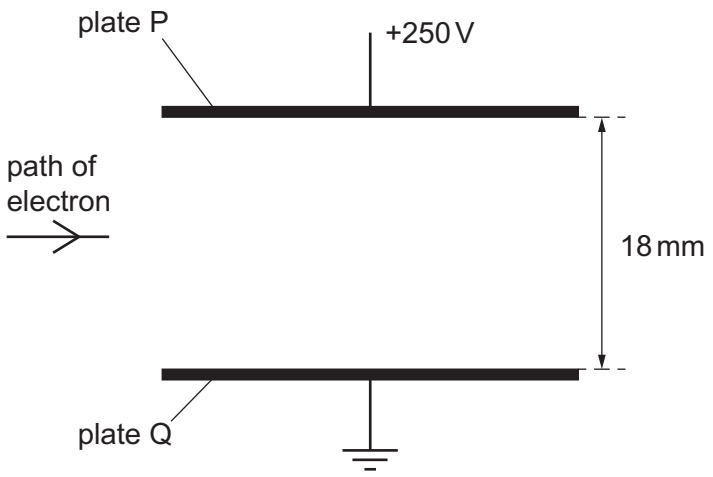

Fig. 4.3

The space between the plates is a vacuum.
The potential difference between the plates is 250 V. The electric field may be assumed to be uniform in the region between the plates and zero outside this region.

(i) State the direction of the electric force on the electron when between the plates.

..... [1]

(ii) Determine the magnitude of the force acting on the electron due to the electric field.

force = ... N [2]

(iii) Explain why the electron does **not** follow a circular path.

.....

..... [1]

[Total: 12]

BLANK PAGE

5 A capacitor, a battery of electromotive force (e.m.f.) 12 V, a resistor R and a two-way switch are connected in the circuit shown in Fig. 5.1.

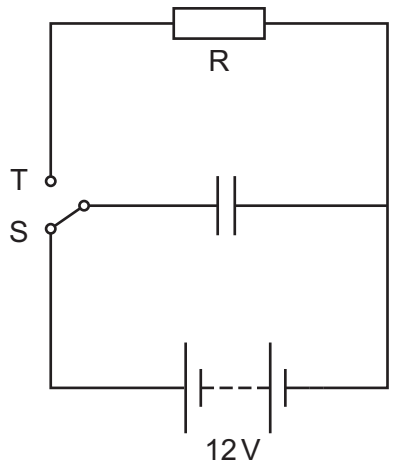

Fig. 5.1

The switch is initially in position S. When the capacitor is fully charged, the switch is moved to position T so that the capacitor discharges. At time *t* after the switch is moved the charge on the capacitor is *Q*.

The variation with *t* of ln (*Q* / μC) is shown in Fig. 5.2.

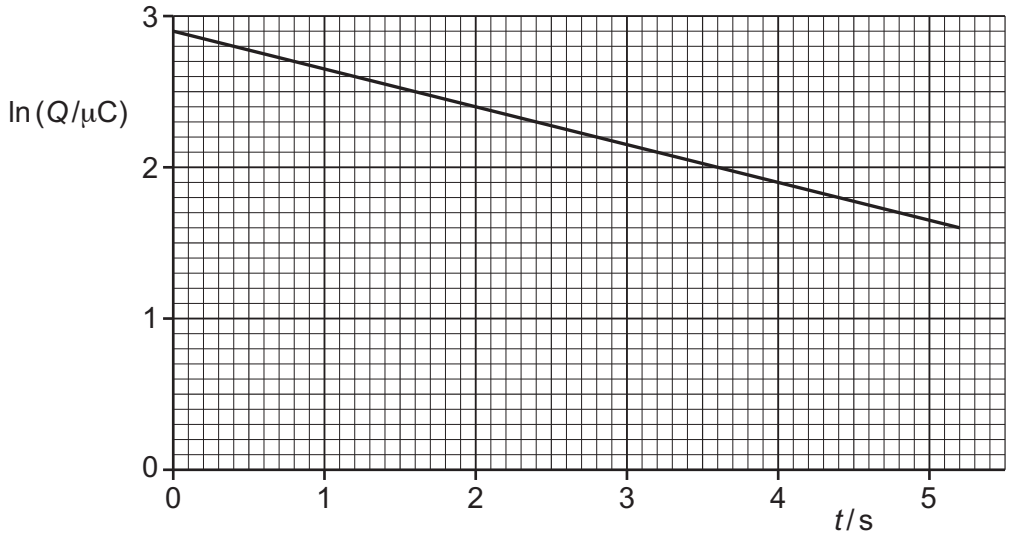

Fig. 5.2

(a) Show that the capacitance of the capacitor is 1.5 μF.

[3]

(b) Determine the resistance of R.

resistance = ... Ω [3]

(c) Calculate the energy stored in the capacitor at time $t = 0$.

energy = ... J [2]

(d) A second identical resistor is now connected in parallel with R.

The switch is initially in position S. When the capacitor is fully charged, the switch is moved to position T so that the capacitor discharges. At time t after the switch is moved the charge on the capacitor is Q.

On Fig. 5.2, sketch a line to show the variation of $\ln(Q/\mu C)$ with t between time $t = 0$ and time $t = 5.0\,s$. [2]

[Total: 10]

6 **(a)** A Hall probe is placed in a magnetic field. The Hall voltage is zero. The Hall probe is rotated to a new position in the magnetic field. The Hall voltage is now maximum.

Explain these observations.

.....

.....

..... [2]

(b) The formula for calculating the Hall voltage V_H as measured by a Hall probe is

$$V_H = \frac{BI}{ntq}.$$

Table 6.1 shows the value of n for two materials.

Table 6.1

material	n / m^{-3}
silicon	9.65×10^{15}
copper	8.49×10^{28}

(i) State the meaning of n.

.....

..... [1]

(ii) Explain why a Hall probe is made from silicon rather than copper.

.....

..... [1]

(c) A Hall probe gives a maximum reading of 24 mV when placed in a uniform magnetic field of flux density 32 mT.

The same Hall probe is then placed in a magnetic field of fixed direction and varying flux density. The Hall probe is in a fixed position so that the angle between the Hall probe and the magnetic field is the same as when the Hall voltage was 24 mV.

The variation of the reading V_H on the Hall probe with time t from time $t = 0$ to time $t = 8.6$ s is shown in Fig. 6.1.

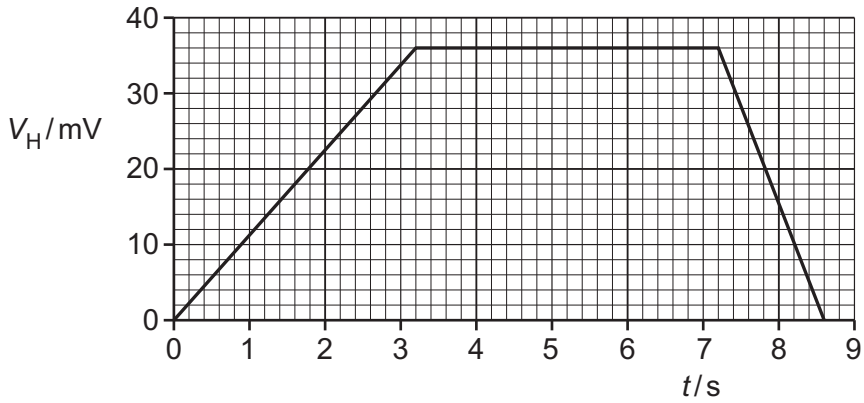

Fig. 6.1

A coil with 780 turns and a diameter of 3.6 cm is placed in this varying magnetic field. The plane of the coil is perpendicular to the field lines.

Calculate the magnitude of the maximum electromotive force (e.m.f.) induced in the coil in the time between $t = 0$ and $t = 8.6$ s.

e.m.f. = ... V [4]

[Total: 8]

7 **(a)** A beam of white light passes through a cloud of cool gas. The spectrum of the transmitted light is viewed and contains a number of dark lines.

Explain why these dark lines occur.

.....

.....

.....

.....

.....

.....

.....

.....

..... [4]

(b) Some energy levels for the electron in an isolated hydrogen atom are illustrated in Fig. 7.1.

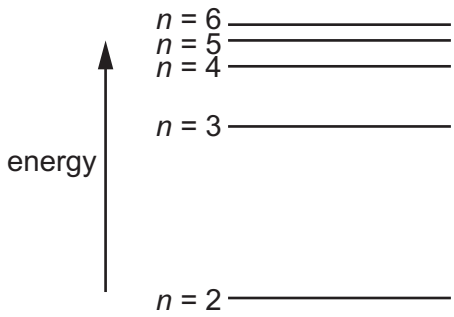

Fig. 7.1

Table 7.1 shows the wavelengths of photons that are emitted in the transitions to $n = 2$ from the other energy levels shown in Fig. 7.1.

Table 7.1

wavelength / nm
412
435
488
658

The energy associated with the energy level $n = 2$ is $-3.40\,\text{eV}$.

Calculate the energy, in J, of energy level $n = 3$.

energy = ... J [3]

[Total: 7]

8 Plutonium-238 ($^{238}_{94}Pu$) is unstable and undergoes alpha decay.

(a) Complete the equation to show the decay of plutonium-238.

$$^{238}_{94}Pu \rightarrow \,^{\cdots\cdots}_{\cdots\cdots}U + \,^{\cdots\cdots}_{\cdots\cdots}\alpha$$

[2]

(b) The power source in a space probe contains 0.874 kg of plutonium-238. Each nucleus of plutonium-238 that decays emits 5.59 MeV of energy. The half-life of plutonium-238 is 87.7 years.

(i) Calculate the initial number N_o of nuclei of plutonium-238 in the power source.

N_o = ... [1]

(ii) Determine the initial activity of the source. Give a unit with your answer.

activity = ... unit ..... [2]

(iii) Use your answer in **(b)(ii)** to determine the initial power output from the source due to the decay of plutonium-238.

power output = ... W [2]

(iv) The space probe will continue to function until the power output from the plutonium in the source decreases to 65.3% of its initial value.

Calculate the time, in years, for which the space probe will function.

time = ... years [2]

(c) An alternative power source uses energy generated from the radioactive decay of polonium-210. This isotope has a half-life of 0.378 years. The mass of the isotope needed for the same initial power output as in **(b)** is 3.37 g.

Suggest **one** advantage and **one** disadvantage of using polonium-210 as the source of energy.

advantage .....

.....

disadvantage .....

.....
[2]

[Total: 11]

9 Ultrasound is used to produce diagnostic information about internal body structures.

(a) Explain how ultrasound waves are detected.

.....

.....

.....

..... [3]

(b) An alternating voltage V varies with time t according to

$$V = V_o \sin \omega t.$$

The voltage is applied to an ultrasound probe.

The root-mean-square (r.m.s.) voltage is 66 V. The frequency of the ultrasound generated by the probe is 4.3 MHz.

Determine the values of

(i) V_o

V_o = ... V [1]

(ii) ω.

ω = ...rad s^{-1} [1]

(c) Table 9.1 contains information about air and soft tissue.

Table 9.1

	density / kg m^{-3}	speed of ultrasound / m s^{-1}	specific acoustic impedance / .....
air	1.30	330	4.3×10^2
soft tissue		1600	1.7×10^6

(i) Determine the unit for the specific acoustic impedance values shown in Table 9.1. [1]

(ii) Calculate the density of soft tissue.

density = ... $kg\,m^{-3}$ [1]

(iii) Use data from Table 9.1 to explain why ultrasound cannot be used to produce an image inside an air-filled cavity such as the lungs.

.....

.....

.....

..... [2]

[Total: 9]

10 **(a)** A student observes different stars from the Earth.
Give **two** reasons why some stars appear brighter than others.

1 .....

.....

2 .....

.....
[2]

(b) State what is meant by a standard candle.

.....

..... [1]

(c) A spectral line from a star within a galaxy is observed to have a wavelength of 660.9 nm. The same spectral line measured in the laboratory is observed to have a wavelength of 656.3 nm.

(i) Show that the speed of the star relative to the Earth is $2.1 \times 10^{6}\,\mathrm{m\,s^{-1}}$.

[1]

(ii) Calculate the distance to the star.

The Hubble constant is $2.3 \times 10^{-18}\,\mathrm{s^{-1}}$.

distance = ... m [2]

(iii) State and explain what can be concluded about the Universe based on this change in observed wavelength.

.....

.....

.....

.....

..... [3]

[Total: 9]

© UCLES 2023

BLANK PAGE

BLANK PAGE

BLANK PAGE

BLANK PAGE

Permission to reproduce items where third-party owned material protected by copyright is included has been sought and cleared where possible. Every reasonable effort has been made by the publisher (UCLES) to trace copyright holders, but if any items requiring clearance have unwittingly been included, the publisher will be pleased to make amends at the earliest possible opportunity.

To avoid the issue of disclosure of answer-related information to candidates, all copyright acknowledgements are reproduced online in the Cambridge Assessment International Education Copyright Acknowledgements Booklet. This is produced for each series of examinations and is freely available to download at www.cambridgeinternational.org after the live examination series.

Cambridge Assessment International Education is part of Cambridge Assessment. Cambridge Assessment is the brand name of the University of Cambridge Local Examinations Syndicate (UCLES), which is a department of the University of Cambridge.

© UCLES 2023