Cambridge Assessment International Education

Cambridge International AS & A Level

CANDIDATE NAME	

CENTRE NUMBER						CANDIDATE NUMBER					

1275799489

PHYSICS **9702/52**

Paper 5 Planning, Analysis and Evaluation **February/March 2022**

1 hour 15 minutes

You must answer on the question paper.

No additional materials are needed.

INSTRUCTIONS

- Answer **all** questions.
- Use a black or dark blue pen. You may use an HB pencil for any diagrams or graphs.
- Write your name, centre number and candidate number in the boxes at the top of the page.
- Write your answer to each question in the space provided.
- Do **not** use an erasable pen or correction fluid.
- Do **not** write on any bar codes.
- You may use a calculator.
- You should show all your working and use appropriate units.

INFORMATION

- The total mark for this paper is 30.
- The number of marks for each question or part question is shown in brackets [ ].

This document has **8** pages.

DC (RW/CGW) 303270/2
© UCLES 2022

1 A trolley with a magnet attached is placed on a thin steel sheet as shown in Fig. 1.1.

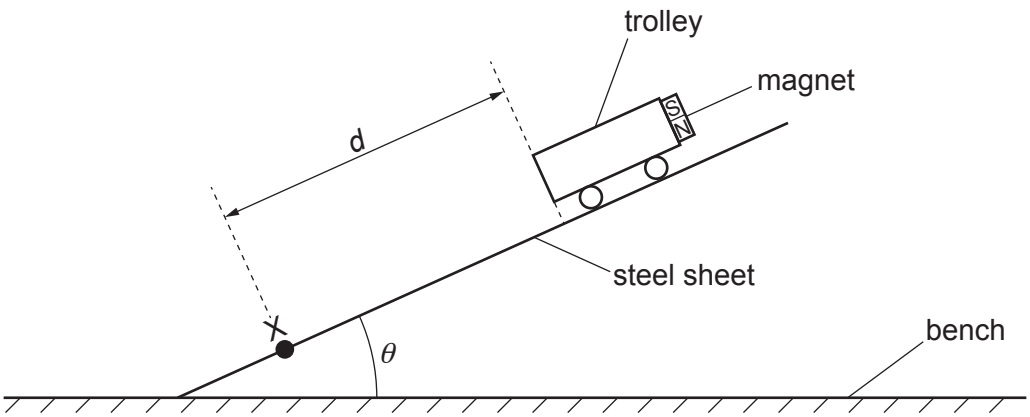

Fig. 1.1

The angle between the sheet and the bench is θ. The distance from point X to the trolley is d.

The trolley is released from rest and travels down the slope. The velocity v of the trolley at X is determined using a light gate.

It is suggested that v is related to θ by the relationship

$$mp\sin\theta - qB = \frac{mv^2}{2d}$$

where m is the mass of the trolley and magnet, B is the magnetic flux density between the magnet and the steel sheet, and p and q are constants.

Plan a laboratory experiment to test the relationship between v and θ.

Draw a diagram showing the arrangement of your equipment.

Explain how the results could be used to determine values for p and q.

In your plan you should include:

- the procedure to be followed
- the measurements to be taken
- the control of variables
- the analysis of the data
- any safety precautions to be taken.

Diagram

.....

.....

.....

.....

.....

.....

.....

.....

.....

.....

.....

.....

.....

.....

.....

..... [15]

2 A student investigates a circuit containing a capacitor and a resistor as shown in Fig. 2.1.

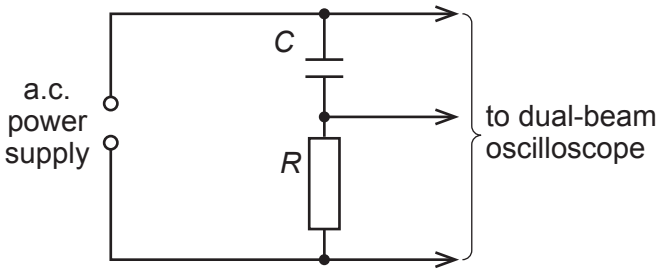

Fig. 2.1

A dual-beam oscilloscope is connected across the capacitor of capacitance C and resistor of resistance R. The oscilloscope displays two traces as shown in Fig. 2.2.

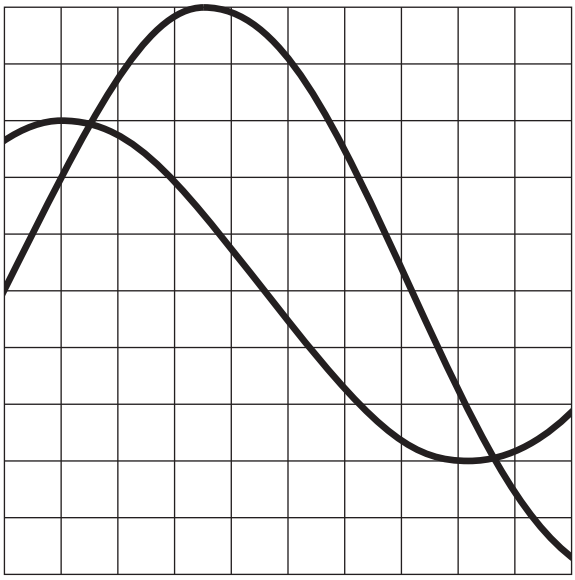

Fig. 2.2

The student determines the phase difference θ between the two traces.

The student repeats the experiment with different resistors.

It is suggested that θ and R are related by the equation

$$\tan\theta = \frac{1}{2\pi fCR}$$

where f is the frequency of the a.c. power supply.

(a) A graph is plotted of $\tan\theta$ on the y-axis against $\frac{1}{R}$ on the x-axis.

Determine an expression for the gradient.

gradient = ... [1]

(b) Values of R and θ are given in Table 2.1.

Each value of R has a percentage uncertainty of ±5%.

Table 2.1

R / Ω	$\frac{1}{R} / 10^{-3}\,\Omega^{-1}$	$\theta / °$	$\tan\theta$
12		80.8	
16		77.5	
22		73.0	
33		65.2	
39		61.7	
43		59.3	

Calculate and record values of $\frac{1}{R} / 10^{-3}\,\Omega^{-1}$ and $\tan\theta$ in Table 2.1.

Include the absolute uncertainties in $\frac{1}{R}$. [2]

(c) **(i)** Plot a graph of $\tan\theta$ against $\frac{1}{R} / 10^{-3}\,\Omega^{-1}$.

Include error bars for $\frac{1}{R}$. [2]

(ii) Draw the straight line of best fit and a worst acceptable straight line on your graph. Label both lines. [2]

(iii) Determine the gradient of the line of best fit. Include the absolute uncertainty in your answer.

gradient = ... [2]

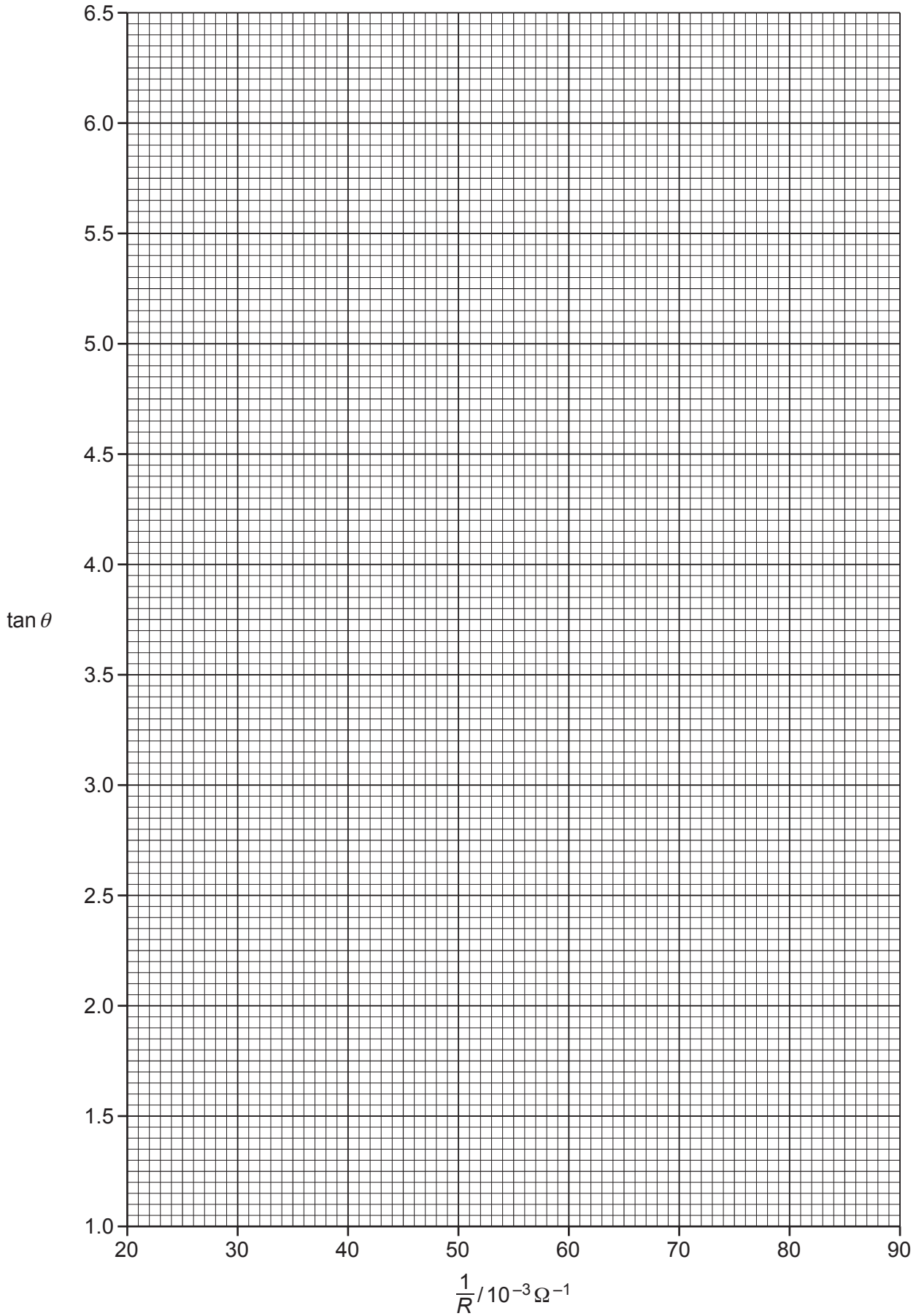
6.5
6.0
5.5
5.0
4.5
4.0
tan θ
3.5
3.0
2.5
2.0
1.5
1.0
20
30
40
50
60
70
80
90
1/R / 10⁻³ Ω⁻¹

(d) The student measured the frequency of the a.c. power supply twice. The student's values were 101 Hz and 97 Hz.
Determine the average frequency *f* of the power supply. Include the absolute uncertainty in *f*.

f = ... Hz [1]

(e) **(i)** Using your answers to **(a)**, **(c)(iii)** and **(d)**, determine the value of *C*. Include an appropriate unit.

C = ... [2]

(ii) Determine the percentage uncertainty in *C*.

percentage uncertainty in *C* = ...% [1]

(f) The experiment is repeated using the same power supply and capacitor.
Determine the resistance of *R* that would give a phase difference of 40°. Include the absolute uncertainty in your answer.

R = ... Ω [2]

[Total: 15]

To avoid the issue of disclosure of answer-related information to candidates, all copyright acknowledgements are reproduced online in the Cambridge Assessment International Education Copyright Acknowledgements Booklet. This is produced for each series of examinations and is freely available to download at www.cambridgeinternational.org after the live examination series.

© UCLES 2022