Cambridge Assessment International Education

Cambridge International AS & A Level

CANDIDATE NAME	

CENTRE NUMBER						CANDIDATE NUMBER					

8119336502

PHYSICS **9702/52**

Paper 5 Planning, Analysis and Evaluation **February/March 2020**

1 hour 15 minutes

You must answer on the question paper.

No additional materials are needed.

INSTRUCTIONS

- Answer **all** questions.
- Use a black or dark blue pen. You may use an HB pencil for any diagrams or graphs.
- Write your name, centre number and candidate number in the boxes at the top of the page.
- Write your answer to each question in the space provided.
- Do **not** use an erasable pen or correction fluid.
- Do **not** write on any bar codes.
- You may use a calculator.
- You should show all your working and use appropriate units.

INFORMATION

- The total mark for this paper is 30.
- The number of marks for each question or part question is shown in brackets [ ].

This document has **8** pages. Blank pages are indicated.

DC (NF/FC) 183948/3
© UCLES 2020

1 Fig. 1.1 shows a bar magnet attached to a spring.

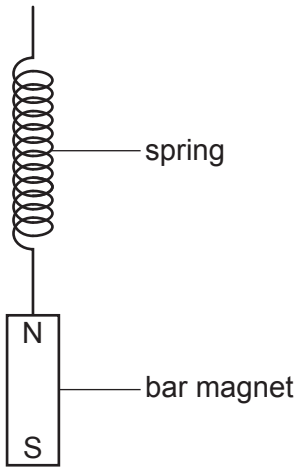

Fig. 1.1

The bar magnet is displaced a distance x from its equilibrium position and released. It then oscillates vertically.

A student investigates how the maximum induced electromotive force (e.m.f.) E in a coil placed below the magnet depends on x.

It is suggested that the relationship between E and x is

$$E = \alpha BNx\sqrt{\frac{k}{m}}$$

where B is the magnetic flux density at one of the poles of the bar magnet, N is the number of turns on the coil, k is the spring constant, m is the mass of the magnet and α is a constant.

Design a laboratory experiment to test the relationship between E and x.
Explain how your results could be used to determine a value for α.

You should draw a diagram, on page 3, showing the arrangement of your equipment. In your account you should pay particular attention to:

- the procedure to be followed
- the measurements to be taken
- the control of variables
- the analysis of the data
- any safety precautions to be taken.

Diagram

.....

.....

.....

.....

.....

.....

.....

.....

.....

.....

.....

.....

.....

.....

.....

..... [15]

2 A student investigates the discharge of a capacitor through a resistor as shown in Fig. 2.1.

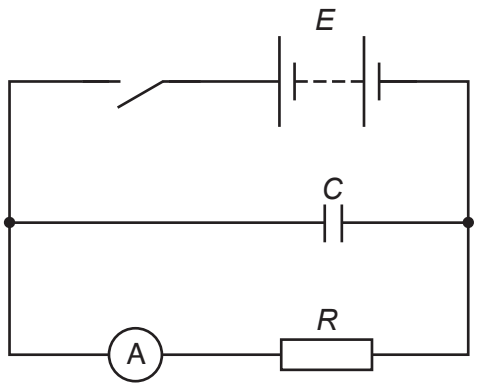

Fig. 2.1

The student initially closes the switch and charges the capacitor. The switch is then opened and a stop-watch is started. The capacitor discharges through the resistor. At different times t the current I is measured.

It is suggested that I and t are related by the equation

$$I = \frac{E}{R}e^{-\left(\frac{t}{RC}\right)}$$

where E is the e.m.f. of the power supply, C is the capacitance of the capacitor and R is the resistance of the resistor.

(a) A graph is plotted of $\ln I$ on the y-axis against t on the x-axis.

Determine expressions for the gradient and the y-intercept.

gradient = ...

y-intercept = ...
[1]

(b) Values of t and I are given in Table 2.1.

Table 2.1

t / s	I / μA	ln (I / μA)
0	46 ± 2	
12	40 ± 2	
24	34 ± 2	
36	28 ± 2	
48	24 ± 2	
60	20 ± 2	

Calculate and record values of ln (I / μA) in Table 2.1.
Include the absolute uncertainties in ln (I / μA). [2]

(c) **(i)** Plot a graph of ln (I / μA) against t / s.
Include error bars for ln (I / μA). [2]

(ii) Draw the straight line of best fit and a worst acceptable straight line on your graph. Both lines should be clearly labelled. [2]

(iii) Determine the gradient of the line of best fit. Include the absolute uncertainty in your answer.

gradient = ... [2]

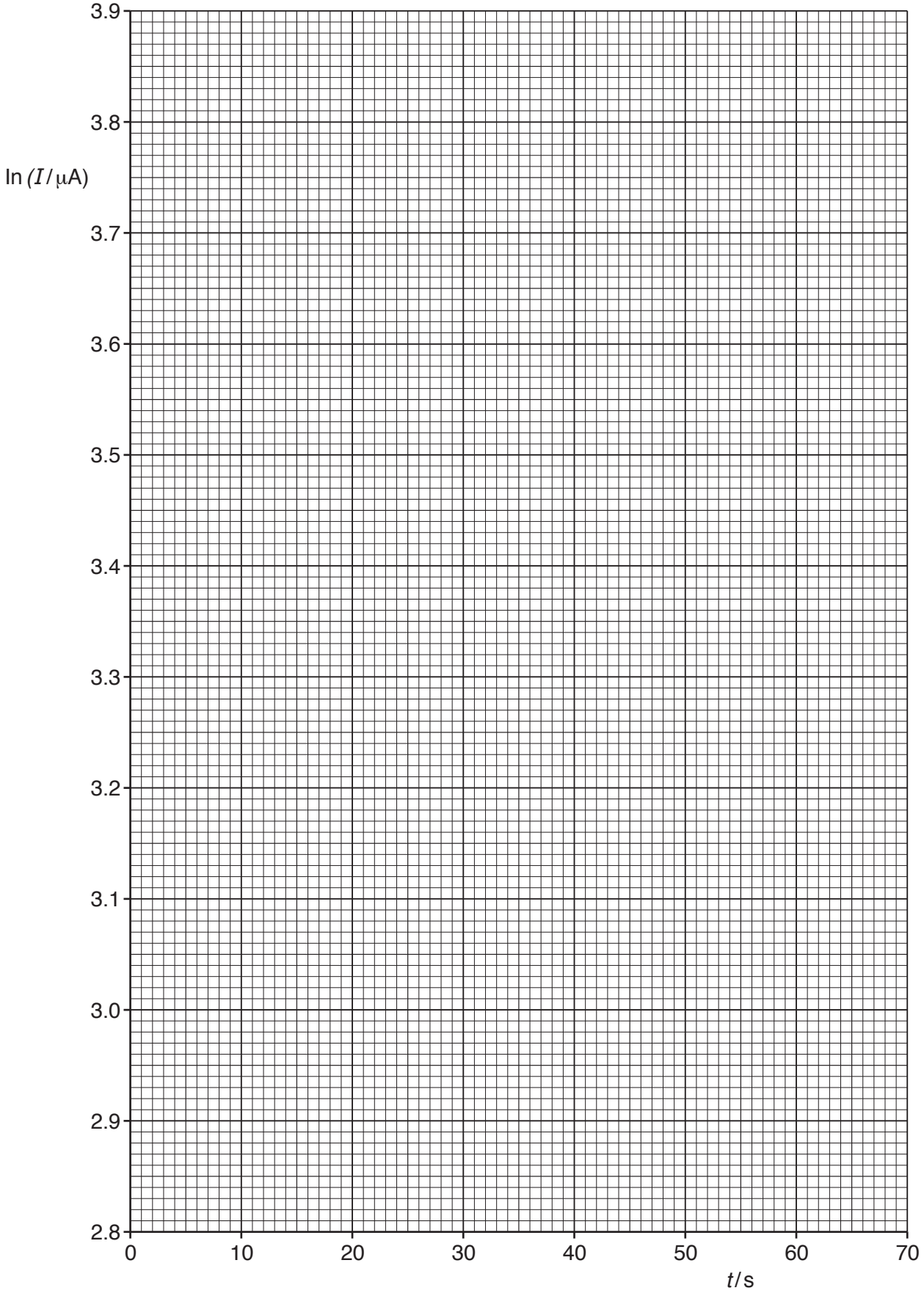
3.9
3.8
ln (I / μA)
3.7
3.6
3.5
3.4
3.3
3.2
3.1
3.0
2.9
2.8
0
10
20
30
40
50
60
70
t / s

(iv) Determine the *y*-intercept of the line of best fit. Do **not** include the absolute uncertainty in your answer.

y-intercept = ... [1]

(d) **(i)** Using your answers to **(a)**, **(c)(iii)** and **(c)(iv)**, determine the values of *C* and *E*. Include appropriate units.

Data: $R = 150\,\text{k}\Omega$

C = ...

E = ...
[3]

(ii) The percentage uncertainty in the resistance *R* of the resistor is 5%.

Determine the absolute uncertainty in *C*.

absolute uncertainty in *C* = ... [1]

(e) Using your results, determine the value of I after the capacitor has discharged through the resistor for 2.0 minutes.

I = ...A [1]
[Total: 15]

Permission to reproduce items where third-party owned material protected by copyright is included has been sought and cleared where possible. Every reasonable effort has been made by the publisher (UCLES) to trace copyright holders, but if any items requiring clearance have unwittingly been included, the publisher will be pleased to make amends at the earliest possible opportunity.

To avoid the issue of disclosure of answer-related information to candidates, all copyright acknowledgements are reproduced online in the Cambridge Assessment International Education Copyright Acknowledgements Booklet. This is produced for each series of examinations and is freely available to download at www.cambridgeinternational.org after the live examination series.

Cambridge Assessment International Education is part of the Cambridge Assessment Group. Cambridge Assessment is the brand name of the University of Cambridge Local Examinations Syndicate (UCLES), which itself is a department of the University of Cambridge.

© UCLES 2020