Cambridge International AS & A Level

Cambridge International Examinations
Cambridge International Advanced Subsidiary and Advanced Level

CANDIDATE NAME	

CENTRE NUMBER						CANDIDATE NUMBER					

* 7 3 7 2 6 3 2 1 9 4 *

PHYSICS **9702/42**

Paper 4 A Level Structured Questions **February/March 2017**

2 hours

Candidates answer on the Question Paper.

No Additional Materials are required.

READ THESE INSTRUCTIONS FIRST

Write your Centre number, candidate number and name on all the work you hand in.
Write in dark blue or black pen.
You may use an HB pencil for any diagrams or graphs.
Do not use staples, paper clips, glue or correction fluid.
DO **NOT** WRITE IN ANY BARCODES.

Answer **all** questions.

Electronic calculators may be used.
You may lose marks if you do not show your working or if you do not use appropriate units.

At the end of the examination, fasten all your work securely together.
The number of marks is given in brackets [ ] at the end of each question or part question.

This document consists of **23** printed pages and **1** blank page.

DC (NH/SW) 127076/6
© UCLES 2017

CAMBRIDGE International Examinations

Data

speed of light in free space	$c = 3.00 \times 10^{8}\,\mathrm{m\,s^{-1}}$
permeability of free space	$\mu_0 = 4\pi \times 10^{-7}\,\mathrm{H\,m^{-1}}$
permittivity of free space	$\varepsilon_0 = 8.85 \times 10^{-12}\,\mathrm{F\,m^{-1}}$
	$(\frac{1}{4\pi\varepsilon_0} = 8.99 \times 10^{9}\,\mathrm{m\,F^{-1}})$
elementary charge	$e = 1.60 \times 10^{-19}\,\mathrm{C}$
the Planck constant	$h = 6.63 \times 10^{-34}\,\mathrm{J\,s}$
unified atomic mass unit	$1\,\mathrm{u} = 1.66 \times 10^{-27}\,\mathrm{kg}$
rest mass of electron	$m_e = 9.11 \times 10^{-31}\,\mathrm{kg}$
rest mass of proton	$m_p = 1.67 \times 10^{-27}\,\mathrm{kg}$
molar gas constant	$R = 8.31\,\mathrm{J\,K^{-1}\,mol^{-1}}$
the Avogadro constant	$N_A = 6.02 \times 10^{23}\,\mathrm{mol^{-1}}$
the Boltzmann constant	$k = 1.38 \times 10^{-23}\,\mathrm{J\,K^{-1}}$
gravitational constant	$G = 6.67 \times 10^{-11}\,\mathrm{N\,m^{2}\,kg^{-2}}$
acceleration of free fall	$g = 9.81\,\mathrm{m\,s^{-2}}$

© UCLES 2017

Formulae

uniformly accelerated motion	$s = ut + \frac{1}{2}at^2$ $v^2 = u^2 + 2as$
work done on/by a gas	$W = p\Delta V$
gravitational potential	$\phi = -\frac{Gm}{r}$
hydrostatic pressure	$p = \rho gh$
pressure of an ideal gas	$p = \frac{1}{3}\frac{Nm}{V}\langle c^2\rangle$
simple harmonic motion	$a = -\omega^2 x$
velocity of particle in s.h.m.	$v = v_0 \cos \omega t$ $v = \pm\, \omega \sqrt{(x_0{}^2 - x^2)}$
Doppler effect	$f_o = \frac{f_s v}{v \pm v_s}$
electric potential	$V = \frac{Q}{4\pi\varepsilon_0 r}$
capacitors in series	$1/C = 1/C_1 + 1/C_2 + \ldots$
capacitors in parallel	$C = C_1 + C_2 + \ldots$
energy of charged capacitor	$W = \frac{1}{2}QV$
electric current	$I = Anvq$
resistors in series	$R = R_1 + R_2 + \ldots$
resistors in parallel	$1/R = 1/R_1 + 1/R_2 + \ldots$
Hall voltage	$V_H = \frac{BI}{ntq}$
alternating current/voltage	$x = x_0 \sin \omega t$
radioactive decay	$x = x_0 \exp(-\lambda t)$
decay constant	$\lambda = \frac{0.693}{t_{\frac{1}{2}}}$

Answer **all** the questions in the spaces provided.

1 **(a)** Define *gravitational potential* at a point.

.....

.....

.....[2]

(b) A rocket is launched from the surface of a planet and moves along a radial path, as shown in Fig. 1.1.

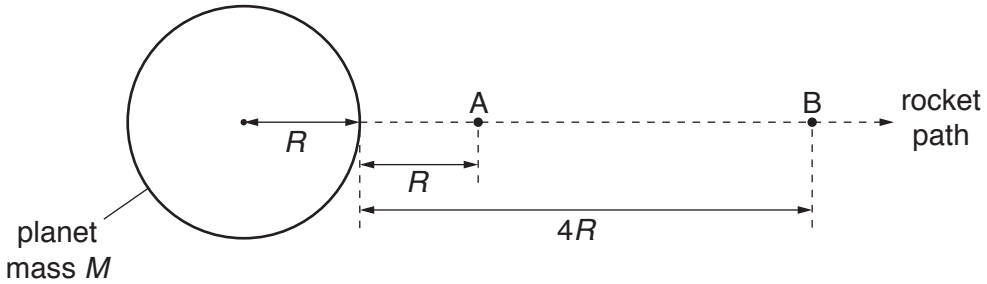

Fig. 1.1

The planet may be considered to be an isolated sphere of radius R with all of its mass M concentrated at its centre. Point A is a distance R from the surface of the planet. Point B is a distance $4R$ from the surface.

(i) Show that the difference in gravitational potential $\Delta\phi$ between points A and B is given by the expression

$$\Delta\phi = \frac{3GM}{10R}$$

where G is the gravitational constant.

[1]

(ii) The rocket motor is switched off at point A. During the journey from A to B, the rocket has a constant mass of 4.7×10^4 kg and its kinetic energy changes from 1.70 TJ to 0.88 TJ.

For the planet, the product GM is $4.0 \times 10^{14}\,\mathrm{N\,m^2\,kg^{-1}}$. It may be assumed that resistive forces to the motion of the rocket are negligible.

Use the expression in **(b)(i)** to determine the distance from A to B.

distance = ...m [3]

[Total: 6]

2 **(a)** The first law of thermodynamics can be represented by the expression

$$\Delta U = q + w.$$

State what is meant by the symbols in the expression.

$+\Delta U$ .....

$+q$ .....

$+w$ .....

[2]

(b) A fixed mass of an ideal gas undergoes a cycle ABCA of changes, as shown in Fig. 2.1.

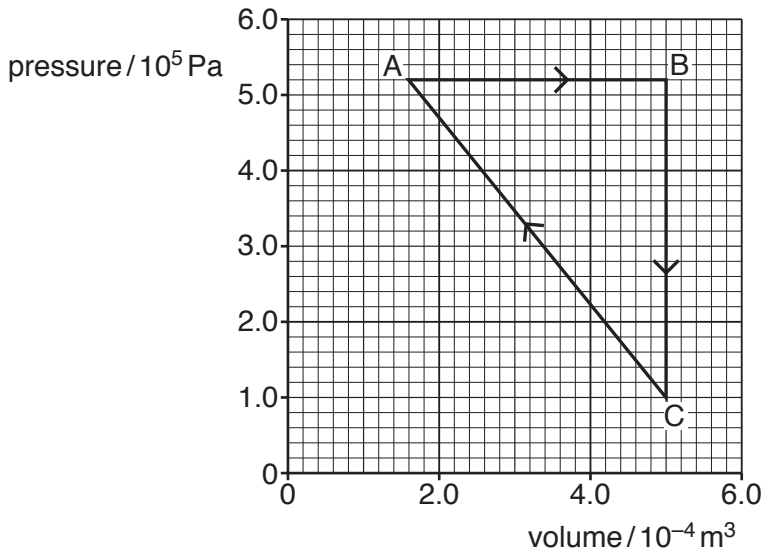

Fig. 2.1

(i) During the change from A to B, the energy supplied to the gas by heating is 442 J.

Use the first law of thermodynamics to show that the internal energy of the gas increases by 265 J.

[2]

(ii) During the change from B to C, the internal energy of the gas decreases by 313 J.

By considering molecular energy, state and explain qualitatively the change, if any, in the temperature of the gas.

.....

.....

.....

.....

.....[3]

(iii) For the change from C to A, use the data in **(b)(i)** and **(b)(ii)** to calculate the change in internal energy.

change in internal energy = ...J [1]

(iv) The temperature of the gas at point A is 227 °C. Calculate the number of molecules in the fixed mass of the gas.

number = ...[2]

[Total: 10]

3 A uniform beam is clamped at one end. A metal block of mass m is fixed to the other end of the beam causing it to bend, as shown in Fig. 3.1.

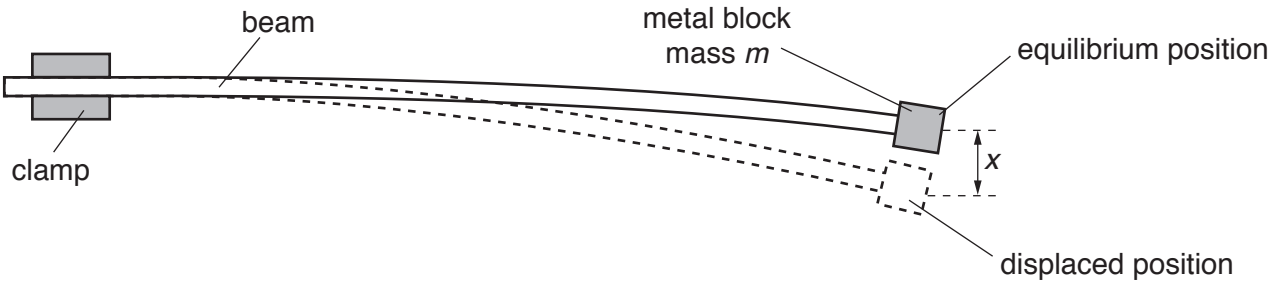

Fig. 3.1

The block is given a small vertical displacement and then released so that it oscillates with simple harmonic motion.

The acceleration a of the block is given by the expression

$$a = -\frac{k}{m}x$$

where k is a constant for the beam and x is the vertical displacement of the block from its equilibrium position.

(a) Explain how it can be deduced from the expression that the block moves with simple harmonic motion.

.....

.....

.....[2]

(b) For the beam, $k = 4.0\,\text{kg}\,\text{s}^{-2}$. Show that the angular frequency ω of the oscillations is given by the expression

$$\omega = \frac{2.0}{\sqrt{m}}.$$

[2]

(c) The initial amplitude of the oscillation of the block is 3.0 cm.

Use the expression in **(b)** to determine the maximum kinetic energy of the oscillations.

maximum kinetic energy = ...J [3]

(d) Over a certain interval of time, the maximum kinetic energy of the oscillations in **(c)** is reduced by 50%. It may be assumed that there is negligible change in the angular frequency of the oscillations.

Determine the amplitude of oscillation.

amplitude = ...m [2]

(e) Permanent magnets are now positioned so that the metal block oscillates between the poles, as shown in Fig. 3.2.

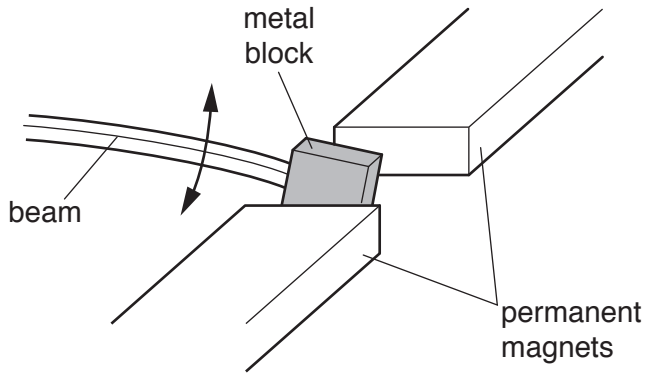

Fig. 3.2

The block is made to oscillate with the same initial amplitude as in **(c)**. Use energy conservation to explain why the energy of the oscillations decreases more rapidly than in **(d)**.

.....

.....

.....

.....

.....[3]

[Total: 12]

4 Explain the main principles of the **generation** of ultrasound waves for medical use.

.....

.....

.....

.....

.....

.....

.....

.....

.....

.....[4]

[Total: 4]

© UCLES 2017

5 **(a)** State **three** advantages of an optic fibre compared to a metal wire for the transmission of a signal.

1. .....

2. .....

3. .....

[3]

(b) An optic fibre of length 57 km is connected between a transmitter and a receiver, as shown in Fig. 5.1.

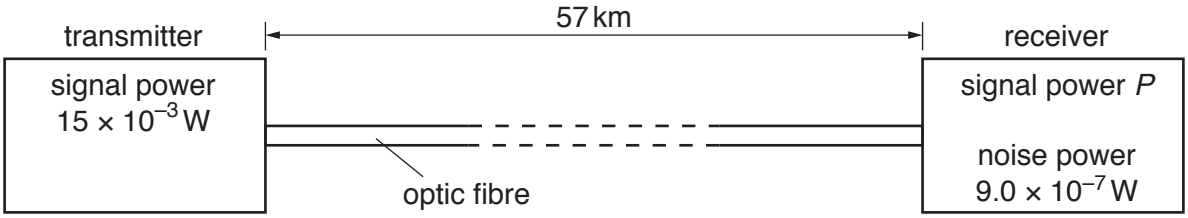

Fig. 5.1

The attenuation per unit length of the optic fibre is 0.50 dB km^{-1}. The transmitter provides an input signal of power 15×10^{-3} W to the fibre. The noise power at the receiver is 9.0×10^{-7} W.

(i) Show that the signal power P entering the receiver from the optic fibre is 2.1×10^{-5} W.

[2]

(ii) A minimum signal-to-noise ratio of 24 dB is needed at the receiver in order for it to be able to distinguish the signal from the noise.

Determine whether the receiver is able to distinguish the signal from the noise.

[3]

[Total: 8]

6 **(a)** State **one** similarity and **one** difference between the electric field lines and the gravitational field lines around an isolated positively charged metal sphere.

similarity .....

.....

difference .....

.....
[2]

(b) A positive point charge $+Q$ is positioned at a fixed point X and an identical positive point charge is positioned at a fixed point Y, as shown in Fig. 6.1.

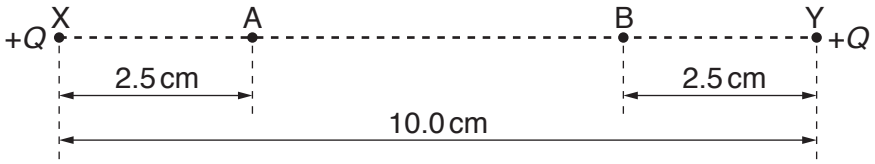

Fig. 6.1

The charges are separated in a vacuum by a distance of 10.0 cm.

Points A and B are on the line XY. Point A is a distance of 2.5 cm from X and point B is a distance of 2.5 cm from Y. The electric field strength at point A is $4.1 \times 10^{-5}\,\mathrm{V\,m^{-1}}$.

(i) Calculate charge $+Q$.

$+Q$ = ...C [3]

(ii) On Fig. 6.2, sketch the variation of the electric field strength E with distance d from A to B, along the line AB.

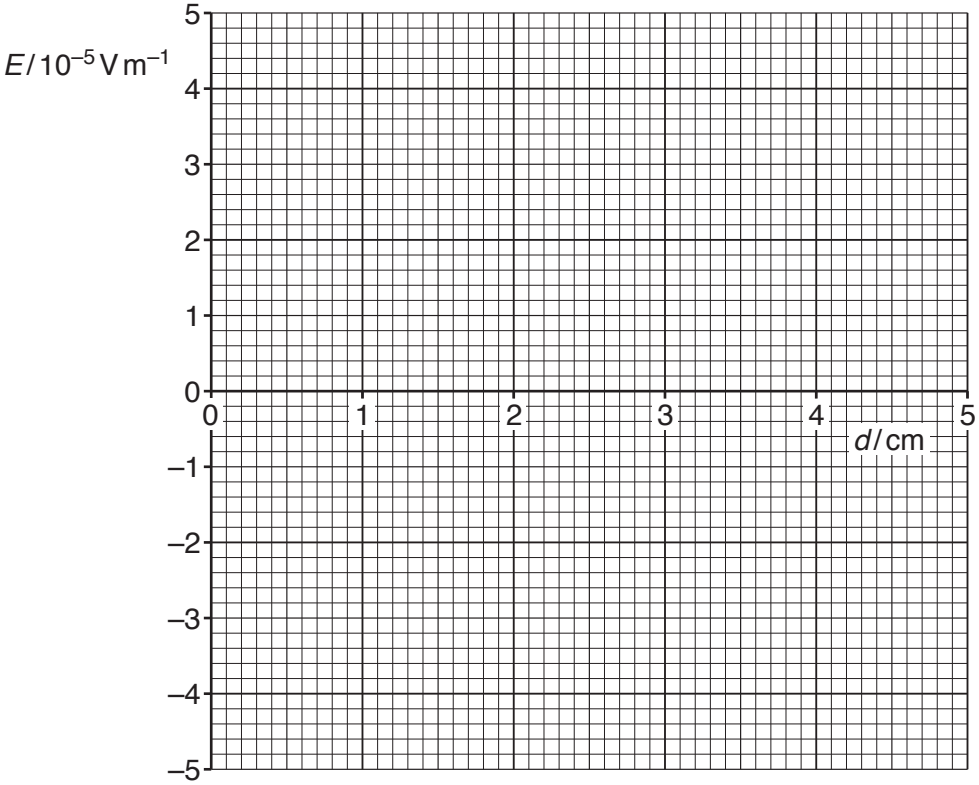

Fig. 6.2

[2]

(iii) A small positive charge is placed at A. The electric field causes this charge to move from rest along the line AB.

Describe the acceleration of the charge as it moves from A to B.

.....

.....

.....

.....[2]

[Total: 9]

7 **(a)** Describe, with a labelled diagram, the structure of a metal-wire strain gauge.

.....

.....

.....

.....[3]

(b) In a strain gauge, the increase in resistance ΔR depends on the increase in length ΔL. The variation of ΔR with ΔL is shown in Fig. 7.1.

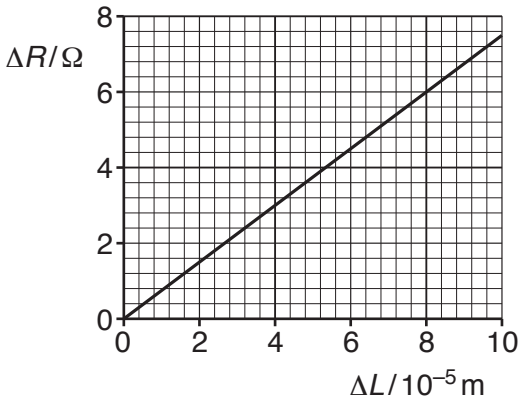

Fig. 7.1

The strain gauge is connected into a circuit incorporating an ideal operational amplifier (op-amp), as shown in Fig. 7.2.

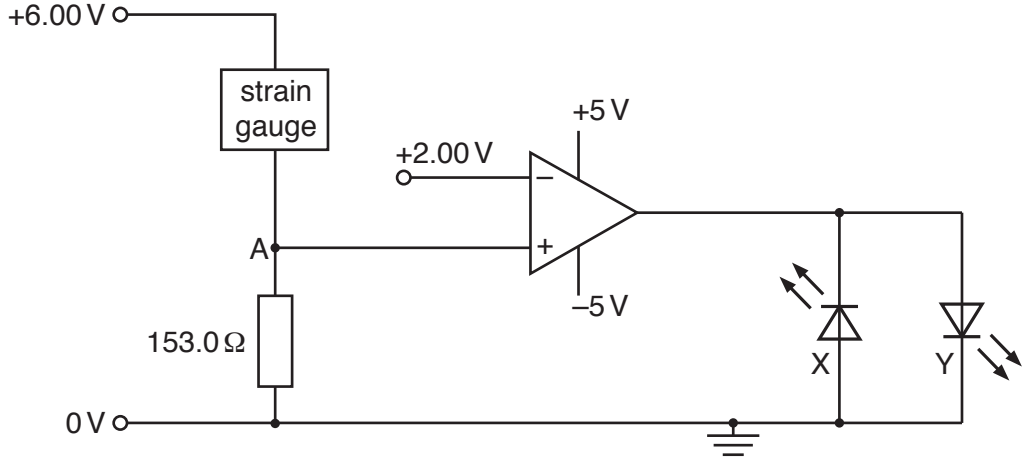

Fig. 7.2

(i) The strain gauge is initially unstrained with resistance 300.0 Ω.

Use data from Fig. 7.1 to calculate the increase in length ΔL of the strain gauge that gives rise to a potential of +2.00 V at point A in Fig. 7.2.

ΔL = …….m [3]

(ii) The strain gauge undergoes a further increase in length beyond the value in **(b)(i)**.

State and explain which one of the light-emitting diodes, X or Y, will be emitting light.

.....

.....

.....

.....

.....[4]

[Total: 10]

8 **(a)** State what is meant by a *magnetic field*.

.....

.....

.....[2]

(b) A particle of charge $+q$ and mass m is travelling in a vacuum with speed v. The particle enters, at a right angle, a uniform magnetic field of flux density B, as shown in Fig. 8.1.

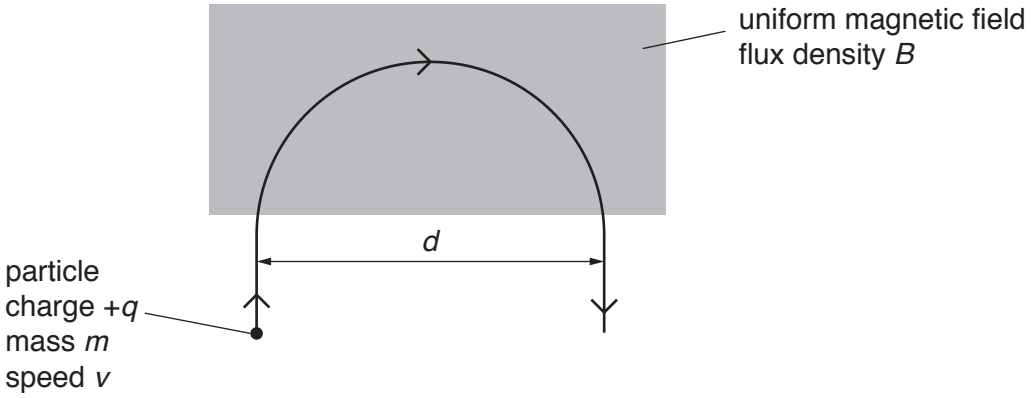

Fig. 8.1

The particle leaves the field after following a semi-circular path of diameter d.

(i) State the direction of the magnetic field.

.....[1]

(ii) Explain why the speed of the particle is not affected by the magnetic field.

.....

.....

.....[2]

(iii) Show that the diameter d of the semi-circular path is given by the expression

$$d = \frac{2mv}{Bq}.$$

[2]

(iv) Use the expression in **(b)(iii)** to show that the time T_F spent in the field by the particle is independent of its speed v.

[2]

[Total: 9]

9 An ideal transformer is shown in Fig. 9.1.

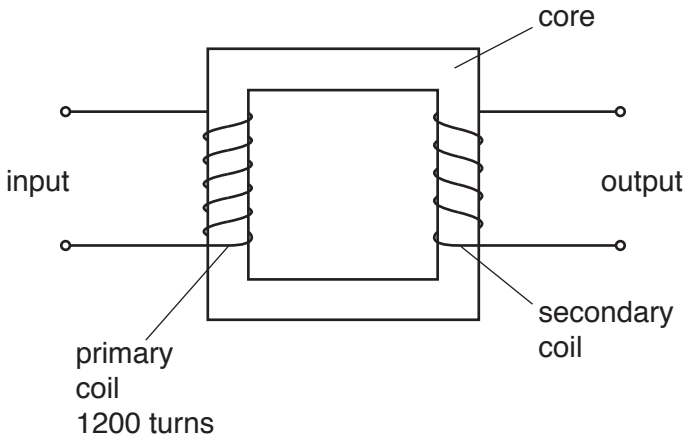

Fig. 9.1

(a) Explain

(i) why the core is made of iron,

.....

.....[1]

(ii) why an electromotive force (e.m.f.) is not induced at the output when a constant direct voltage is at the input.

.....

.....

.....[2]

(b) An alternating voltage of peak value 150 V is applied across the 1200 turns of the primary coil. The variation with time *t* of the e.m.f. *E* induced across the secondary coil is shown in Fig. 9.2.

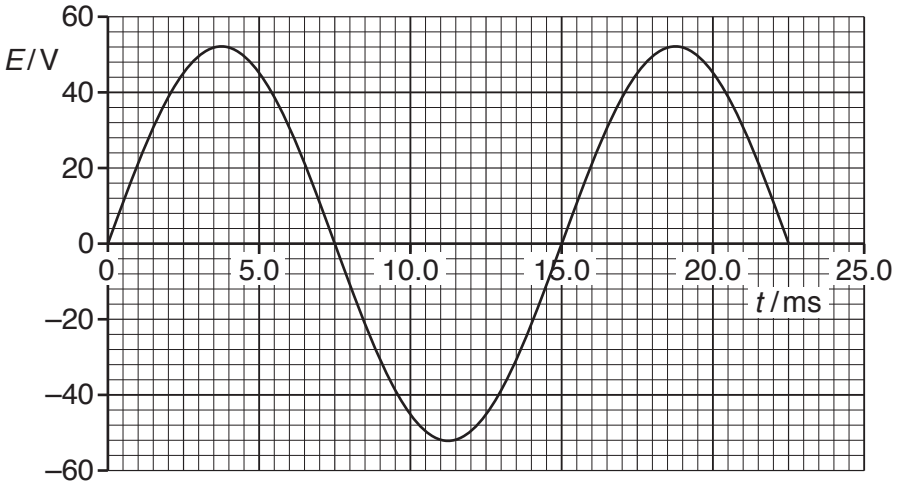

Fig. 9.2

Use data from Fig. 9.2 to

(i) calculate the number of turns of the secondary coil,

number = ...[2]

(ii) state one time when the magnetic flux linking the secondary coil is a maximum.

time = ... ms [1]

(c) A resistor is connected between the output terminals of the secondary coil. The mean power dissipated in the resistor is 1.2 W. It may be assumed that the varying voltage across the resistor is equal to the varying e.m.f. *E* shown in Fig. 9.2.

(i) Calculate the resistance of the resistor.

resistance = ... Ω [2]

(ii) On Fig. 9.3, sketch the variation with time *t* of the power *P* dissipated in the resistor for *t* = 0 to *t* = 22.5 ms.

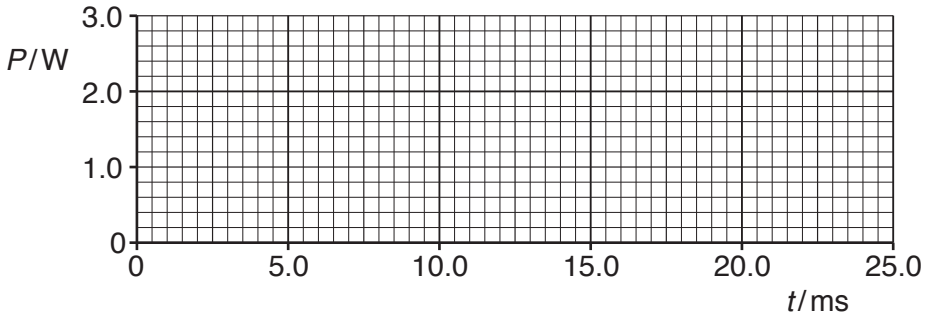

Fig. 9.3

[3]

[Total: 11]

10 **(a)** State what is meant by a *photon*.

.....

.....[2]

(b) Light in a beam has a continuous spectrum that lies within the visible region. The photons of light have energies ranging from 1.60 eV to 2.60 eV.

The beam passes through some hydrogen gas. It then passes through a diffraction grating and an absorption spectrum is observed.

(i) All of the light absorbed by the hydrogen is re-emitted. Explain why dark lines are still observed in the absorption spectrum.

.....

.....[1]

(ii) Some of the energy levels of an electron in a hydrogen atom are illustrated in Fig. 10.1.

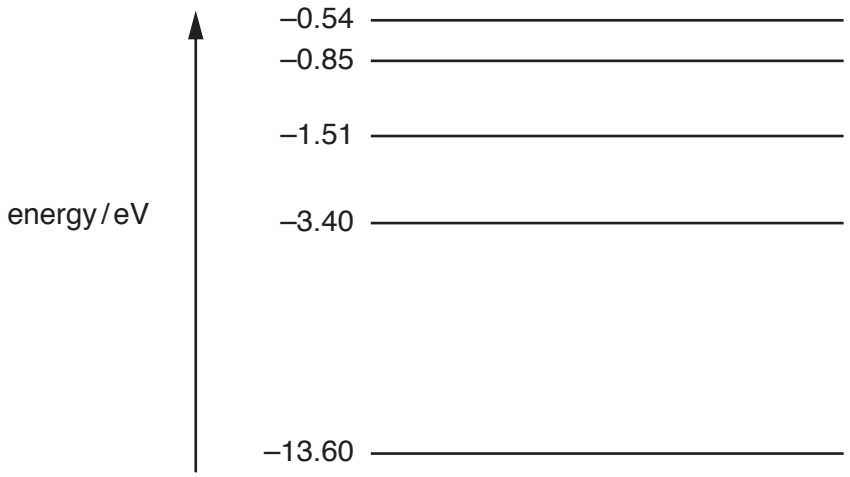

Fig. 10.1 (not to scale)

The dark lines in the absorption spectrum are the result of electron transitions between energy levels.

On Fig. 10.1, draw arrows to show the initial electron transitions between energy levels that could give rise to dark lines in the absorption spectrum. [2]

(iii) Calculate the shortest wavelength of the light in the beam.

wavelength = ...m [3]

[Total: 8]

11 Use band theory to explain why, unlike a copper wire, the resistance of an intrinsic semiconductor **decreases** with an increase of temperature.

.....

.....

.....

.....

.....

.....

.....

.....

.....

.....

.....

.....[5]

[Total: 5]

12 **(a)** Define the *binding energy* of a nucleus.

.....

.....

.....[2]

(b) A stationary nucleus of uranium-238 ($^{238}_{92}U$) decays to form a nucleus of thorium-234 ($^{234}_{90}Th$). An α-particle and a gamma-ray photon are emitted. The equation representing the decay is

$$^{238}_{92}U \rightarrow {}^{234}_{90}Th + {}^{4}_{2}He + {}^{0}_{0}\gamma$$

The masses of the nuclei are given in Fig. 12.1.

nucleus	mass / u
uranium-238	238.05076
thorium-234	234.04357
helium-4	4.00260

Fig. 12.1

(i) State the relationship between the binding energies of the nuclei that is consistent with this reaction being energetically possible.

.....

.....[1]

(ii) Calculate, for this reaction,

1. the change, in u, of the mass,

change of mass = ...u [1]

2. the total energy, in J, released.

energy = ...J [2]

(iii) State and explain whether the energy of the gamma-ray photon is equal to the energy released in the reaction.

.....

.....

.....[2]

[Total: 8]

BLANK PAGE

Permission to reproduce items where third-party owned material protected by copyright is included has been sought and cleared where possible. Every reasonable effort has been made by the publisher (UCLES) to trace copyright holders, but if any items requiring clearance have unwittingly been included, the publisher will be pleased to make amends at the earliest possible opportunity.

To avoid the issue of disclosure of answer-related information to candidates, all copyright acknowledgements are reproduced online in the Cambridge International Examinations Copyright Acknowledgements Booklet. This is produced for each series of examinations and is freely available to download at www.cie.org.uk after the live examination series.

Cambridge International Examinations is part of the Cambridge Assessment Group. Cambridge Assessment is the brand name of University of Cambridge Local Examinations Syndicate (UCLES), which is itself a department of the University of Cambridge.

© UCLES 2017