Cambridge International AS & A Level

Cambridge Assessment International Education
Cambridge International Advanced Subsidiary and Advanced Level

CANDIDATE NAME	

CENTRE NUMBER						CANDIDATE NUMBER					

PHYSICS **9702/51**

Paper 5 Planning, Analysis and Evaluation **May/June 2019**

1 hour 15 minutes

Candidates answer on the Question Paper.

No Additional Materials are required.

READ THESE INSTRUCTIONS FIRST

Write your centre number, candidate number and name on all the work you hand in.
Write in dark blue or black pen.
You may use an HB pencil for any diagrams or graphs.
Do not use staples, paper clips, glue or correction fluid.
DO **NOT** WRITE IN ANY BARCODES.

Answer **all** questions.

Electronic calculators may be used.
You may lose marks if you do not show your working or if you do not use appropriate units.

At the end of the examination, fasten all your work securely together.
The number of marks is given in brackets [ ] at the end of each question or part question.

This document consists of **8** printed pages.

DC (KN/SG) 163593/2
© UCLES 2019

Cambridge Assessment International Education

[Turn over

1 A student is investigating the bending of a loaded wooden strip. Fig. 1.1 shows a rectangular strip of width *b* and thickness *t* overhanging the edge of a bench. A length *L* of the strip is unsupported.

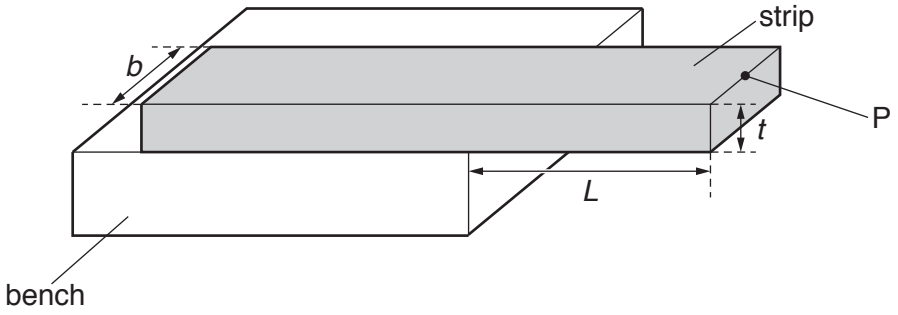

Fig. 1.1

A load of mass *M* is positioned at point P. This causes the unsupported part of the strip to bend with a deflection *s*, as shown in Fig. 1.2.

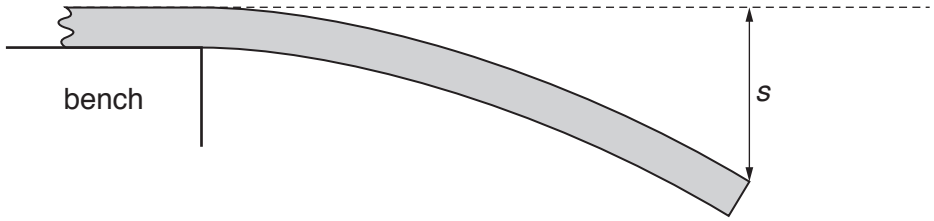

Fig. 1.2 (not to scale)

It is suggested that the relationship between *s* and *L* is

$$E = \frac{4MgL^3}{bst^3}$$

where *g* is the acceleration of free fall and *E* is the Young modulus of the wood.

Design a laboratory experiment to test the relationship between *s* and *L*.
Explain how your results could be used to determine a value for *E*.

You should draw a diagram, on page 3, showing the arrangement of your equipment. In your account you should pay particular attention to:

- the procedure to be followed
- the measurements to be taken
- the control of variables
- the analysis of the data
- any safety precautions to be taken.

Diagram

.....

.....

.....

.....

.....

.....

.....

.....

.....

.....

.....

.....

.....

.....

.....

..... [15]

2 A student is investigating a rotary variable resistor, as shown in Fig. 2.1.

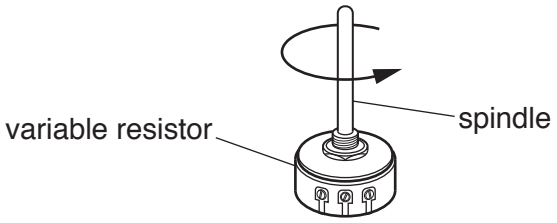

Fig. 2.1

The variable resistor is connected to a battery of electromotive force (e.m.f.) E and negligible internal resistance, as shown in Fig. 2.2.

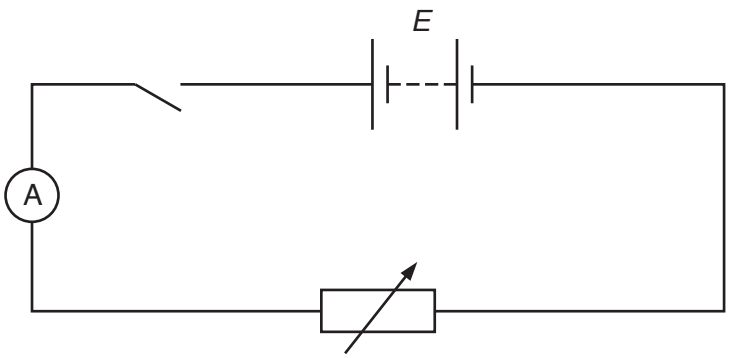

Fig. 2.2

The student uses a protractor to measure the angle θ through which the spindle of the variable resistor is rotated and records the current I.

The experiment is repeated for different angles.

It is suggested that I and θ are related by the equation

$$E = IK\theta$$

where K is a constant.

(a) A graph is plotted of $\frac{1}{I}$ on the y-axis against θ on the x-axis.

Determine an expression for the gradient.

gradient = ... [1]

(b) Values of θ and I are given in Fig. 2.3.

θ/°	I/mA	$\frac{1}{I}$/A^{-1}
95	5.7 ± 0.1	
115	4.7 ± 0.1	
135	4.0 ± 0.1	
155	3.5 ± 0.1	
175	3.1 ± 0.1	
195	2.7 ± 0.1	

Fig. 2.3

Calculate and record values of $\frac{1}{I}$/A^{-1} in Fig. 2.3.

Include the absolute uncertainties in $\frac{1}{I}$. [2]

(c) **(i)** Plot a graph of $\frac{1}{I}$/A^{-1} against θ/°.

Include error bars for $\frac{1}{I}$/A^{-1}. [2]

(ii) Draw the straight line of best fit and a worst acceptable straight line on your graph. Both lines should be clearly labelled. [2]

(iii) Determine the gradient of the line of best fit. Include the absolute uncertainty in your answer.

gradient = ... [2]

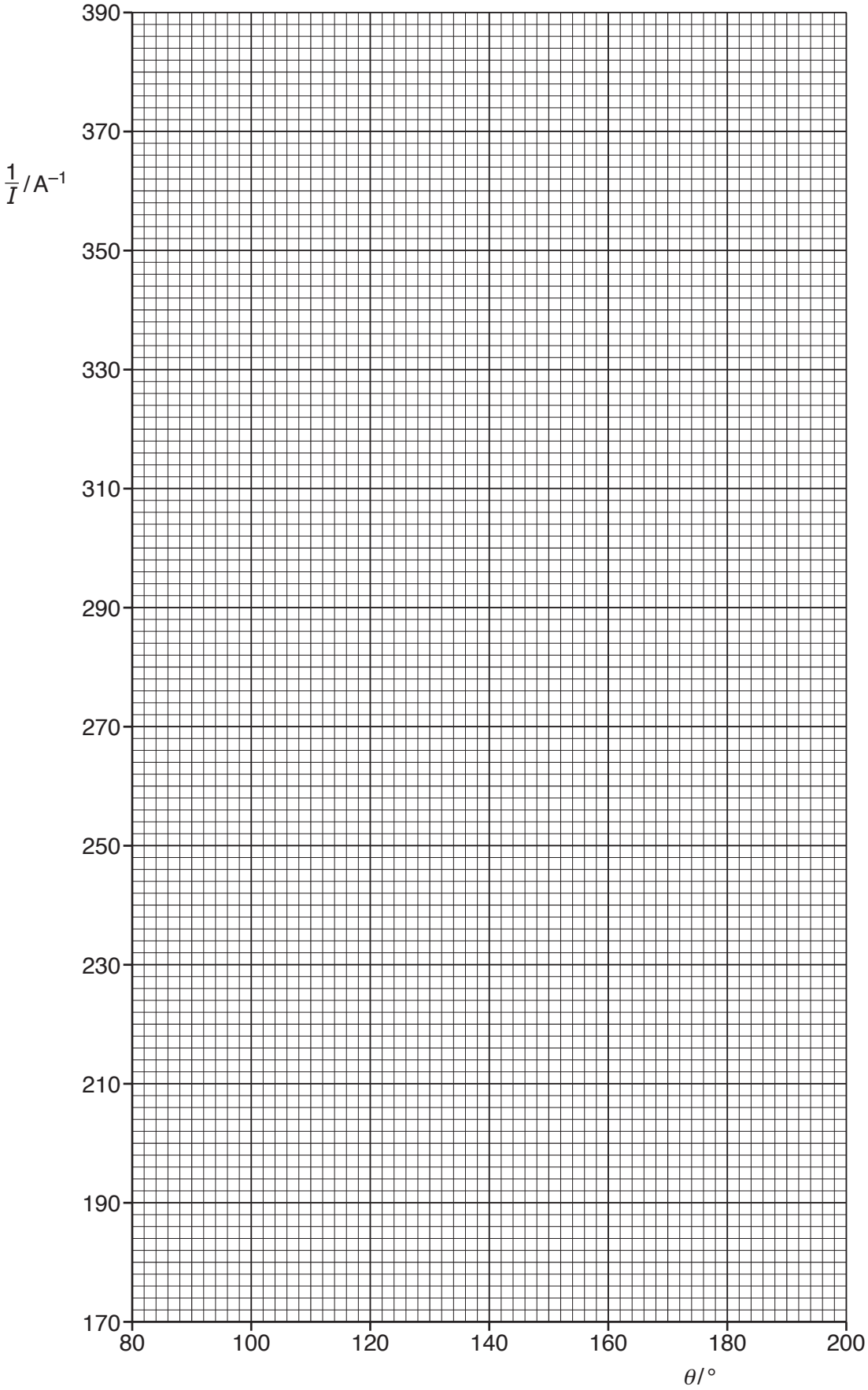
390
370
350
330
310
290
270
250
230
210
190
170
$\frac{1}{I}$ / A^{-1}
80
100
120
140
160
180
200
θ / °

(d) The student measured the e.m.f. of the battery twice. The student's values were 9.6 V and 9.2 V.
Determine the average e.m.f. E of the battery. Include the absolute uncertainty in E.

E = ... V [1]

(e) **(i)** Using your answers to **(a)**, **(c)(iii)** and **(d)**, determine the value of K. Include an appropriate unit.

K = ... [2]

(ii) Determine the percentage uncertainty in K.

percentage uncertainty = ...% [1]

(f) Determine the angle θ through which the spindle of the variable resistor is rotated so that the current is 10.0 mA. Include the absolute uncertainty in your answer.

θ = ...° [2]

[Total: 15]

To avoid the issue of disclosure of answer-related information to candidates, all copyright acknowledgements are reproduced online in the Cambridge Assessment International Education Copyright Acknowledgements Booklet. This is produced for each series of examinations and is freely available to download at www.cambridgeinternational.org after the live examination series.

© UCLES 2019

Cambridge International AS & A Level

Cambridge Assessment International Education
Cambridge International Advanced Subsidiary and Advanced Level

CANDIDATE NAME	

CENTRE NUMBER						CANDIDATE NUMBER				

1781677011

PHYSICS **9702/52**

Paper 5 Planning, Analysis and Evaluation **May/June 2019**

1 hour 15 minutes

Candidates answer on the Question Paper.

No Additional Materials are required.

READ THESE INSTRUCTIONS FIRST

Write your centre number, candidate number and name on all the work you hand in.
Write in dark blue or black pen.
You may use an HB pencil for any diagrams or graphs.
Do not use staples, paper clips, glue or correction fluid.
DO **NOT** WRITE IN ANY BARCODES.

Answer **all** questions.

Electronic calculators may be used.
You may lose marks if you do not show your working or if you do not use appropriate units.

At the end of the examination, fasten all your work securely together.
The number of marks is given in brackets [ ] at the end of each question or part question.

This document consists of **8** printed pages.

DC (LK/TP) 163808/2
© UCLES 2019

Cambridge Assessment International Education

1 A student is investigating the stability of a wooden block resting on a bench.

A strip is attached by a nail to the centre of the top of the block and is able to rotate, as shown in Fig. 1.1 and Fig. 1.2.

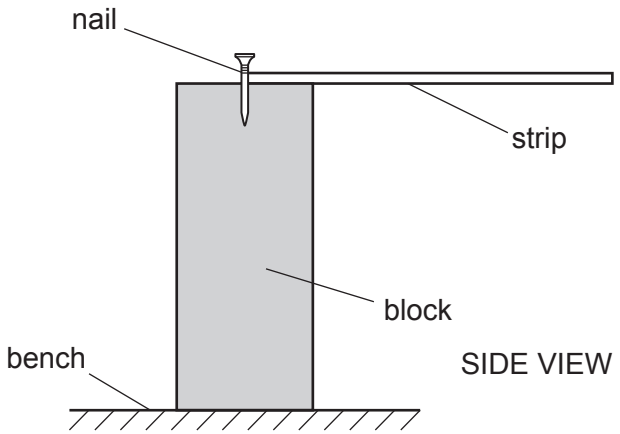

Fig. 1.1

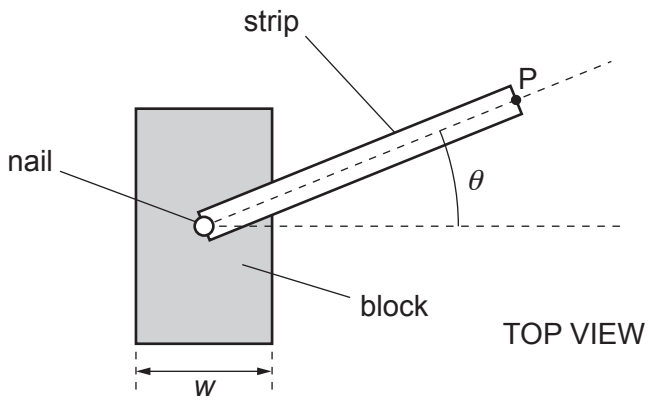

Fig. 1.2

A load of mass m is attached to the free end of the strip at point P. The student is investigating the position of the strip indicated by angle θ, as shown in Fig. 1.2, at which the block just topples.

It is suggested that the relationship between m and θ is

$$\alpha V w = 2mL\cos\theta - mw$$

where α is a constant, V is the volume of the block, w is the width of the block and L is the distance between the centre of the nail and the centre of the load.

Design a laboratory experiment to test the relationship between m and θ.
Explain how your results could be used to determine a value for α.

You should draw a diagram, on page 3, showing the arrangement of your equipment.
In your account you should pay particular attention to:

- the procedure to be followed
- the measurements to be taken
- the control of variables
- the analysis of the data
- any safety precautions to be taken.

Diagram

.....

.....

.....

.....

.....

.....

.....

.....

.....

.....

.....

.....

.....

.....

.....

.....

..... [15]

2 A student is investigating the oscillations of a mass attached to an arrangement of springs. Fig. 2.1 shows a mass attached to two springs connected in series.

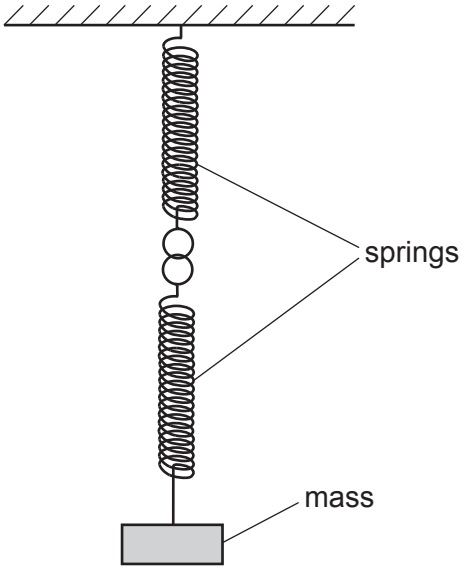

Fig. 2.1

The student determines the spring constant k for the arrangement of the springs. A stopwatch is used to measure the time t for 20 oscillations. The measurement of t is repeated and the average period T is determined.

The experiment is repeated for different arrangements and different numbers of springs.

It is suggested that T and k are related by the equation

$$T = 2\pi\sqrt{\frac{M}{k}}$$

where M is the mass.

(a) A graph is plotted of T^2 on the y-axis against $\frac{1}{k}$ on the x-axis.

Determine an expression for the gradient.

gradient = ... [1]

(b) Values of k, $\frac{1}{k}$ and the measurements of t are given in Fig. 2.2.

k / N m^{-1}	$\frac{1}{k}$ / m N^{-1}	t / s	t / s	T / s	T^2 / s^2
7.9	0.13	22.2	22.6		
11	0.091	19.2	18.8		
15	0.067	16.6	16.0		
24	0.042	12.8	13.4		
32	0.031	11.0	11.8		
49	0.020	9.8	9.0		

Fig. 2.2

Calculate and record values of T / s and T^2 / s^2 in Fig. 2.2.
Include the absolute uncertainties in T and T^2. [4]

(c) **(i)** Plot a graph of T^2 / s^2 against $\frac{1}{k}$ / m N^{-1}.
Include error bars for T^2. [2]

(ii) Draw the straight line of best fit and a worst acceptable straight line on your graph. Both lines should be clearly labelled. [2]

(iii) Determine the gradient of the line of best fit. Include the absolute uncertainty in your answer.

gradient = ... [2]

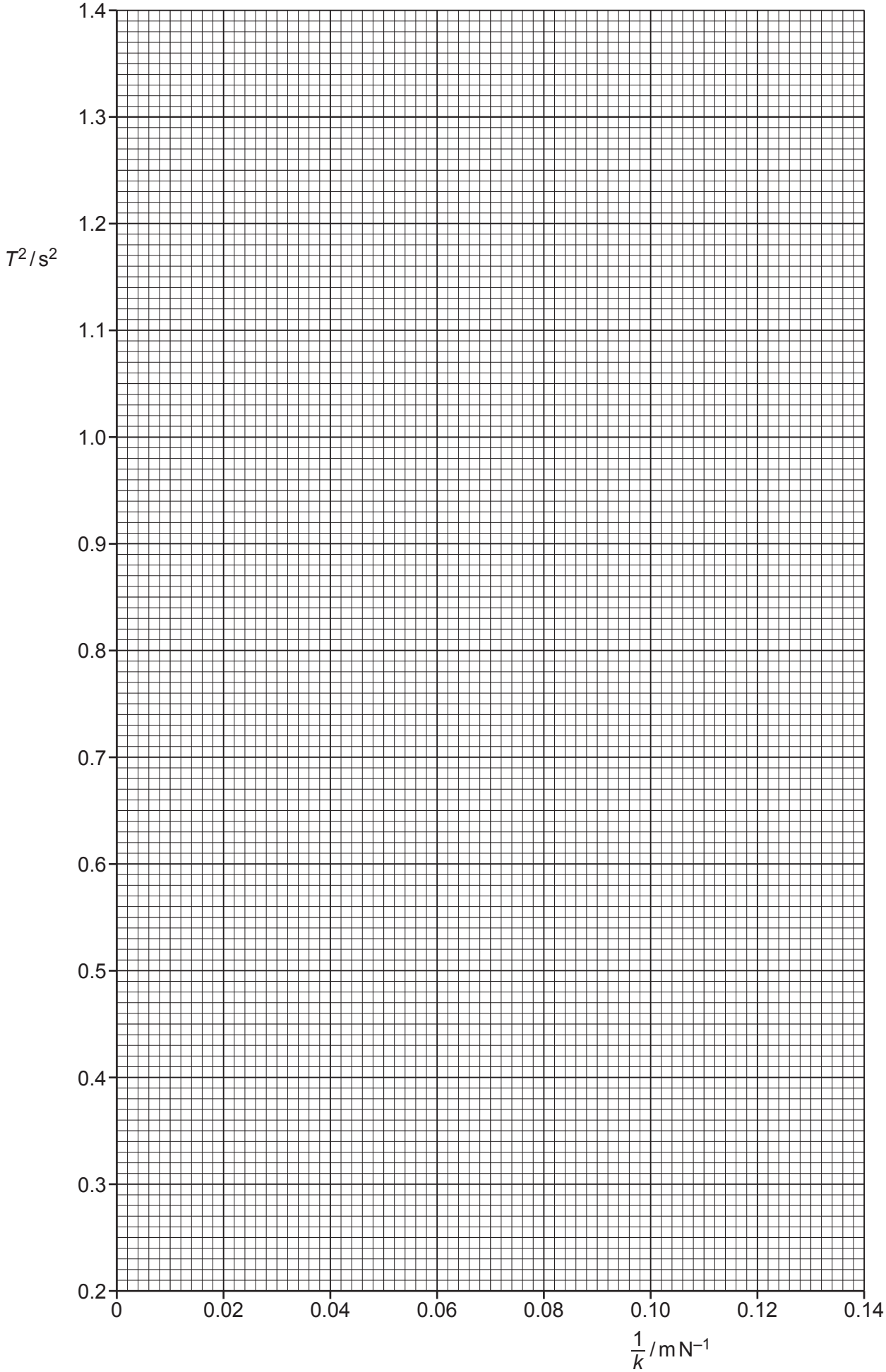
1.4
1.3
1.2
1.1
1.0
0.9
0.8
0.7
0.6
0.5
0.4
0.3
0.2
T^2 / s^2
0
0.02
0.04
0.06
0.08
0.10
0.12
0.14
$\frac{1}{k}$ / m N^{-1}

(d) **(i)** Using your answers to **(a)** and **(c)(iii)**, determine the value of *M*. Include an appropriate unit.

M = ... [1]

(ii) Determine the percentage uncertainty in *M*.

percentage uncertainty = ... % [1]

(e) Determine the spring constant *k* for an arrangement of springs using the same mass that would have a period of 2.50 ± 0.01 s. Include the absolute uncertainty in your answer.

k = ... $N\,m^{-1}$ [2]

[Total: 15]

Permission to reproduce items where third-party owned material protected by copyright is included has been sought and cleared where possible. Every reasonable effort has been made by the publisher (UCLES) to trace copyright holders, but if any items requiring clearance have unwittingly been included, the publisher will be pleased to make amends at the earliest possible opportunity.

To avoid the issue of disclosure of answer-related information to candidates, all copyright acknowledgements are reproduced online in the Cambridge Assessment International Education Copyright Acknowledgements Booklet. This is produced for each series of examinations and is freely available to download at www.cambridgeinternational.org after the live examination series.

Cambridge Assessment International Education is part of the Cambridge Assessment Group. Cambridge Assessment is the brand name of the University of Cambridge Local Examinations Syndicate (UCLES), which itself is a department of the University of Cambridge.

© UCLES 2019

Cambridge International AS & A Level

Cambridge Assessment International Education
Cambridge International Advanced Subsidiary and Advanced Level

CANDIDATE NAME	

CENTRE NUMBER						CANDIDATE NUMBER					

6280976103

PHYSICS **9702/53**

Paper 5 Planning, Analysis and Evaluation **May/June 2019**

1 hour 15 minutes

Candidates answer on the Question Paper.

No Additional Materials are required.

READ THESE INSTRUCTIONS FIRST

Write your centre number, candidate number and name on all the work you hand in.
Write in dark blue or black pen.
You may use an HB pencil for any diagrams or graphs.
Do not use staples, paper clips, glue or correction fluid.
DO **NOT** WRITE IN ANY BARCODES.

Answer **all** questions.

Electronic calculators may be used.
You may lose marks if you do not show your working or if you do not use appropriate units.

At the end of the examination, fasten all your work securely together.
The number of marks is given in brackets [ ] at the end of each question or part question.

This document consists of **8** printed pages.

DC (PQ) 177046
© UCLES 2019

Cambridge Assessment International Education

1 A student is investigating the bending of a loaded wooden strip. Fig. 1.1 shows a rectangular strip of width *b* and thickness *t* overhanging the edge of a bench. A length *L* of the strip is unsupported.

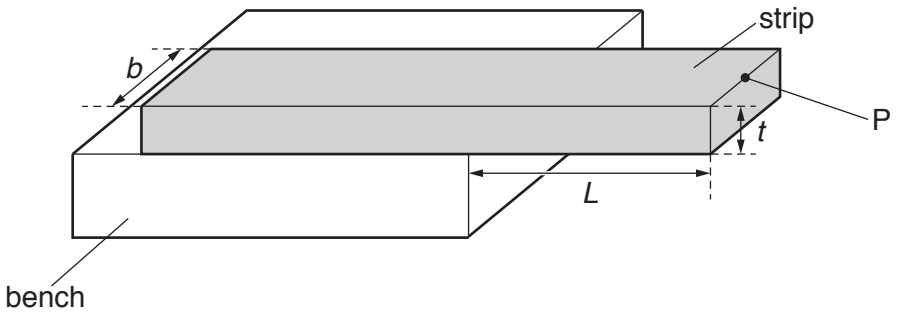

Fig. 1.1

A load of mass *M* is positioned at point P. This causes the unsupported part of the strip to bend with a deflection *s*, as shown in Fig. 1.2.

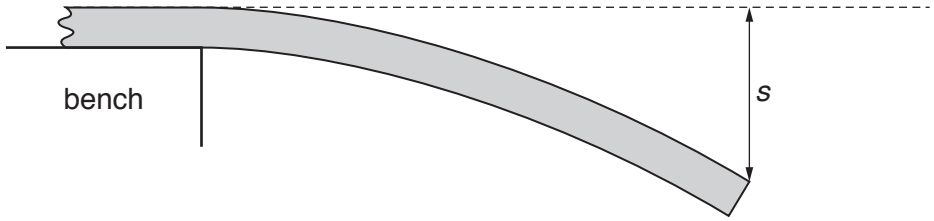

Fig. 1.2 (not to scale)

It is suggested that the relationship between *s* and *L* is

$$E = \frac{4MgL^3}{bst^3}$$

where *g* is the acceleration of free fall and *E* is the Young modulus of the wood.

Design a laboratory experiment to test the relationship between *s* and *L*.
Explain how your results could be used to determine a value for *E*.

You should draw a diagram, on page 3, showing the arrangement of your equipment. In your account you should pay particular attention to:

- the procedure to be followed
- the measurements to be taken
- the control of variables
- the analysis of the data
- any safety precautions to be taken.

Diagram

.....

.....

.....

.....

.....

.....

.....

.....

.....

.....

.....

.....

.....

.....

.....

..... [15]

2 A student is investigating a rotary variable resistor, as shown in Fig. 2.1.

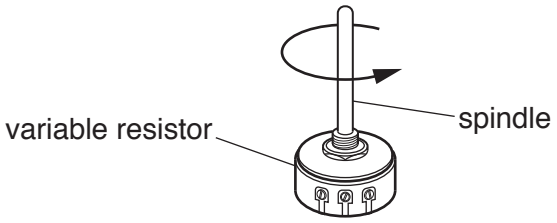

Fig. 2.1

The variable resistor is connected to a battery of electromotive force (e.m.f.) E and negligible internal resistance, as shown in Fig. 2.2.

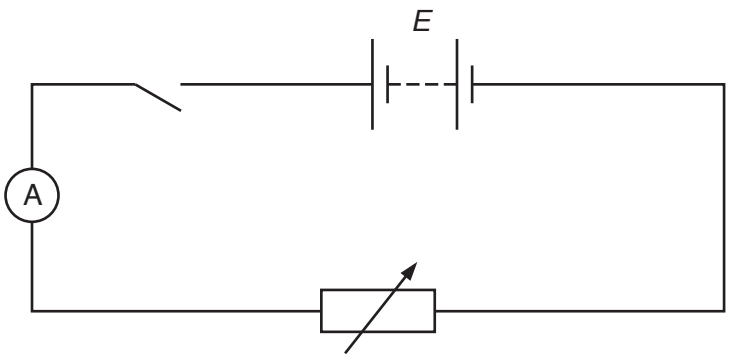

Fig. 2.2

The student uses a protractor to measure the angle θ through which the spindle of the variable resistor is rotated and records the current I.

The experiment is repeated for different angles.

It is suggested that I and θ are related by the equation

$$E = IK\theta$$

where K is a constant.

(a) A graph is plotted of $\frac{1}{I}$ on the y-axis against θ on the x-axis.

Determine an expression for the gradient.

gradient = ... [1]

(b) Values of θ and I are given in Fig. 2.3.

θ/°	I/mA	$\frac{1}{I}$/A^{-1}
95	5.7 ± 0.1	
115	4.7 ± 0.1	
135	4.0 ± 0.1	
155	3.5 ± 0.1	
175	3.1 ± 0.1	
195	2.7 ± 0.1	

Fig. 2.3

Calculate and record values of $\frac{1}{I}$/A^{-1} in Fig. 2.3.

Include the absolute uncertainties in $\frac{1}{I}$. [2]

(c) **(i)** Plot a graph of $\frac{1}{I}$/A^{-1} against θ/°.

Include error bars for $\frac{1}{I}$/A^{-1}. [2]

(ii) Draw the straight line of best fit and a worst acceptable straight line on your graph. Both lines should be clearly labelled. [2]

(iii) Determine the gradient of the line of best fit. Include the absolute uncertainty in your answer.

gradient = ... [2]

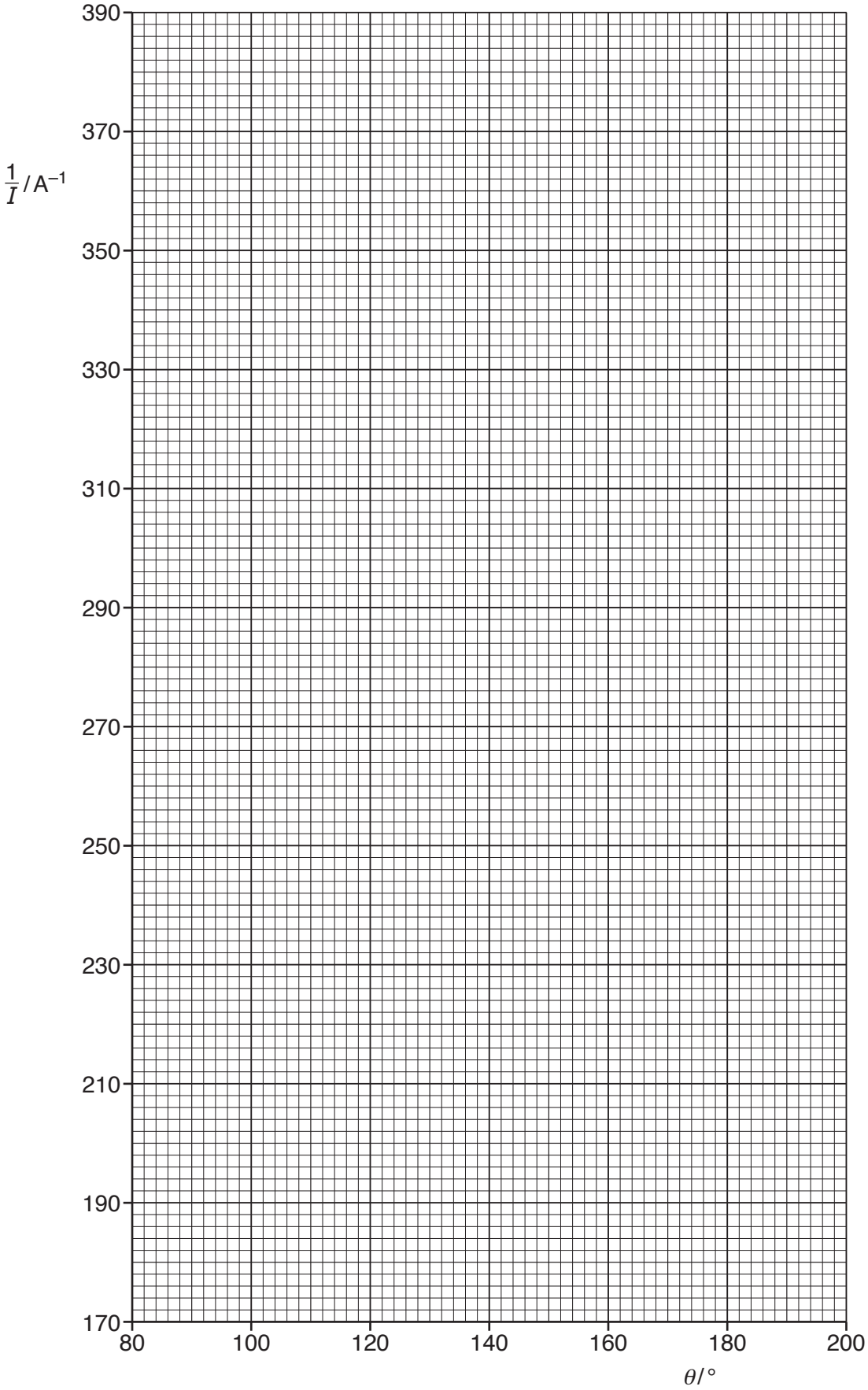
390
370
350
330
310
290
270
250
230
210
190
170
$\frac{1}{I}$ / A^{-1}
80
100
120
140
160
180
200
θ / °

(d) The student measured the e.m.f. of the battery twice. The student's values were 9.6 V and 9.2 V.
Determine the average e.m.f. E of the battery. Include the absolute uncertainty in E.

E = ... V [1]

(e) **(i)** Using your answers to **(a)**, **(c)(iii)** and **(d)**, determine the value of K. Include an appropriate unit.

K = ... [2]

(ii) Determine the percentage uncertainty in K.

percentage uncertainty = ...% [1]

(f) Determine the angle θ through which the spindle of the variable resistor is rotated so that the current is 10.0 mA. Include the absolute uncertainty in your answer.

θ = ...° [2]

[Total: 15]

To avoid the issue of disclosure of answer-related information to candidates, all copyright acknowledgements are reproduced online in the Cambridge Assessment International Education Copyright Acknowledgements Booklet. This is produced for each series of examinations and is freely available to download at www.cambridgeinternational.org after the live examination series.

© UCLES 2019