Rewarding Learning

Centre Number

Candidate Number

General Certificate of Secondary Education
2019

Single Award Science

Unit 4

Booklet A

Higher Tier

[GSA43]

TIME

2 hours.

INSTRUCTIONS TO CANDIDATES

Write your Centre Number and Candidate Number in the spaces provided at the top of this page.
Write your answers in the spaces provided in this question paper.
Answer **all** questions.

INFORMATION FOR CANDIDATES

The total mark for this paper is **30**.
Figures in brackets printed down the right-hand side of pages indicate the marks awarded to each question or part question.
Follow all health and safety instructions.
You may use a ruler and calculator if required.
The apparatus and materials required to complete the task(s) are provided.
A Data Leaflet, which includes a Periodic Table of the Elements, is included in this question paper.

For Examiner's use only	
Question Number	Marks
1	
2	
Total Marks	

Task 1

Examiner Only	
Marks	Remark

1 When a metal is added to an acid, there is a change in temperature. To investigate this, you are provided with three samples of metal filings (zinc, magnesium and iron) and hydrochloric acid.

(a) Carry out the procedure below and record your results in the table provided.

1. Use a measuring cylinder to measure 25 cm^3 of hydrochloric acid.
2. Pour the hydrochloric acid into the polystyrene cup which is inside a beaker.
3. Measure and record the initial temperature of the acid.
4. Add two level spatulas of zinc filings to the acid.
5. Stir the acid and metal gently.
6. Measure and record the highest temperature reached by the acid. (You are advised not to wait longer than 5 minutes.)
7. Repeat steps 1–6 for the magnesium and then the iron filings.
8. Complete the table by calculating the change in temperature.

A result for aluminium is already provided.

Metal	Initial temperature/°C	Highest temperature/°C	Change in temperature/°C
Aluminium	**18**	**24**	**6**
Zinc			
Magnesium			
Iron			

[2]

(b) When carrying out a scientific investigation, risks or hazards need to be identified and steps taken to minimise these. For this investigation state **one** possible risk or hazard and what you did to minimise the danger.

_____

_____

_____

_____ [2]

(c) **(i)** Use the results to draw a **bar chart** on the grid below.
You will need to add a suitable scale on the vertical axis (change in temperature).

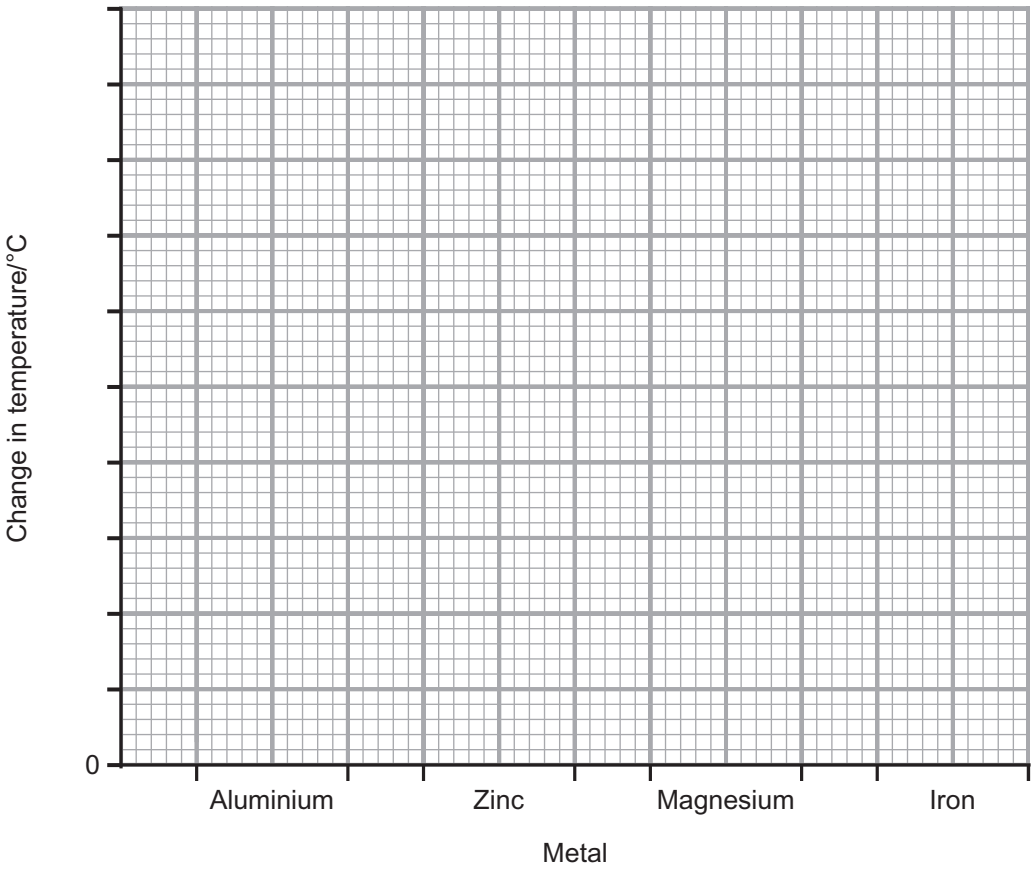

[3]

(ii) Use **your** results to place the metals (**zinc**, **magnesium** and **iron**) in order of increasing reactivity.

_____ least reactive

_____ ↓

_____ most reactive [1]

(iii) State **one** thing you could have done to increase the **reliability** of the results of this investigation.

_____

_____ [1]

Examiner Only	
Marks	Remark

Examiner Only	
Marks	Remark

(d) When carrying out an investigation it is important to produce accurate results.

(i) Suggest how stirring the acid before taking the temperature increased the accuracy of your results.

_____

_____ [1]

(ii) Name **one** piece of apparatus that could have been used to measure the mass of metal added.

_____ [1]

(e) Variables in an investigation can be described as dependent, independent or controlled. Identify **two** controlled variables in this investigation.

1. _____

2. _____ [2]

(f) This investigation was repeated using aluminium and **more** concentrated hydrochloric acid. Suggest what effect, if any, this would have on how quickly the temperature changed.

_____

_____ [1]

(g) Why is it **not** important that the initial temperature is exactly the same **for each metal**?

_____

_____ [1]

Task 2

Examiner Only	
Marks	Remark

2 Ohm's law states:

The current through a wire is directly proportional to the voltage across the wire, provided the temperature remains constant.

To prove Ohm's law you are provided with the circuit as shown in the diagram below.

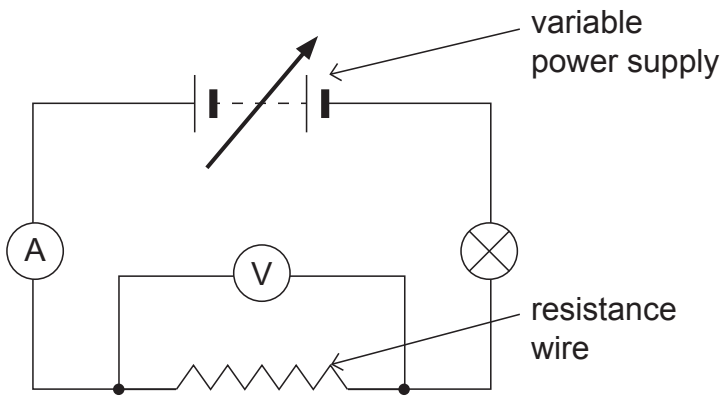

(a) Carry out the investigation by following the method below.

1. Make sure the power supply is switched off.
2. Set the power supply to 2 V.
3. Switch on the power supply.
4. Use the table below to record the voltage and current shown by each **meter**. Record your results to **one** decimal place.
5. Switch off the power supply for one minute.
6. Turn the power supply to a higher value and repeat steps 3, 4 and 5. Collect five sets of results at different voltages.

You should not exceed 10 V on the power supply.

Voltage/V	Current/A
0.0	0.0

[2]

Examiner Only	
Marks	Remark

(b) **(i)** Describe fully how the two meters are connected in this circuit.

_____

_____

_____ [2]

(ii) Apart from temperature, suggest **two** things that were kept the same for the resistance wire, to make sure this was a fair test.

1. _____

2. _____ [2]

(c) **(i)** Use the grid below to plot and draw a line graph of your results. You will need to add a scale to the vertical axis.

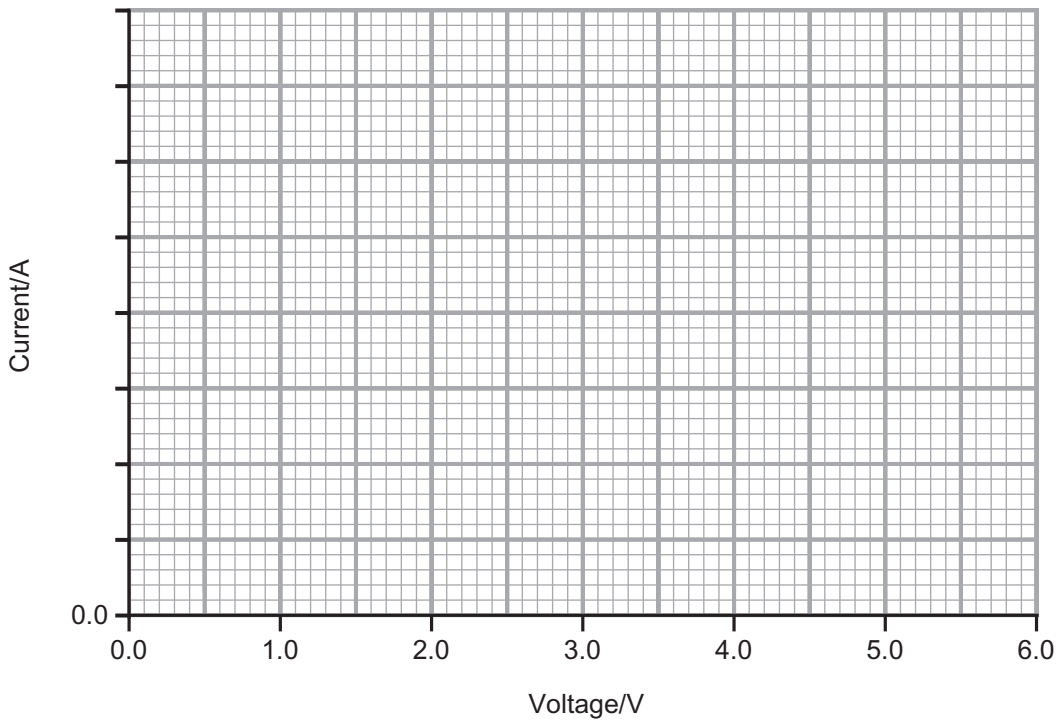

[4]

(ii) State the trend shown by your results.

_____

_____ [1]

(iii) Do your results prove Ohm's law? Explain your answer.

_____

_____ [1]

(d) During the experiment the power supply was switched off after each set of readings. Explain fully, with reference to Ohm's law, why this was done.

_____

_____

_____

_____ [2]

(e) Name the dependent variable in this investigation.

_____ [1]

Examiner Only	
Marks	Remark

THIS IS THE END OF THE QUESTION PAPER

Permission to reproduce all copyright material has been applied for.
In some cases, efforts to contact copyright holders may have been unsuccessful and CCEA will be happy to rectify any omissions of acknowledgement in future if notified.

SYMBOLS OF SELECTED IONS

Positive ions

Name	Symbol
Ammonium	NH_4^+
Chromium(III)	Cr^{3+}
Copper(II)	Cu^{2+}
Iron(II)	Fe^{2+}
Iron(III)	Fe^{3+}
Lead(II)	Pb^{2+}
Silver	Ag^+
Zinc	Zn^{2+}

Negative ions

Name	Symbol
Butanoate	$C_3H_7COO^-$
Carbonate	CO_3^{2-}
Dichromate	$Cr_2O_7^{2-}$
Ethanoate	CH_3COO^-
Hydrogencarbonate	HCO_3^-
Hydroxide	OH^-
Methanoate	$HCOO^-$
Nitrate	NO_3^-
Propanoate	$C_2H_5COO^-$
Sulfate	SO_4^{2-}
Sulfite	SO_3^{2-}

SOLUBILITY IN COLD WATER OF COMMON SALTS, HYDROXIDES AND OXIDES

Soluble
All sodium, potassium and ammonium salts
All nitrates
Most chlorides, bromides and iodides EXCEPT silver and lead chlorides, bromides and iodides
Most sulfates EXCEPT lead and barium sulfates Calcium sulfate is slightly soluble

Insoluble
Most carbonates EXCEPT sodium, potassium and ammonium carbonates
Most hydroxides EXCEPT sodium, potassium and ammonium hydroxides
Most oxides EXCEPT sodium, potassium and calcium oxides which react with water

© CCEA 2017
COUNCIL FOR THE CURRICULUM, EXAMINATIONS AND ASSESSMENT
29 Clarendon Road, Clarendon Dock, Belfast BT1 3BG
Tel: +44 (0)28 9026 1200 Fax: +44 (0)28 9026 1234
Email: info@ccea.org.uk Web: www.ccea.org.uk

Rewarding Learning

New Specification

Rewarding Learning

Data Leaflet

Including the Periodic Table of the Elements

For the use of candidates taking
Science: Chemistry,
Science: Double Award
or Science: Single Award

Copies must be free from notes or additions of any kind. No other type of data booklet or information sheet is authorised for use in the examinations

gcse examinations

chemistry

For first teaching from September 2017

THE PERIODIC TABLE OF ELEMENTS

Group

1	2											3	4	5	6	7	0
							1 **H** Hydrogen 1										4 **He** Helium 2
7 **Li** Lithium 3	9 **Be** Beryllium 4											11 **B** Boron 5	12 **C** Carbon 6	14 **N** Nitrogen 7	16 **O** Oxygen 8	19 **F** Fluorine 9	20 **Ne** Neon 10
23 **Na** Sodium 11	24 **Mg** Magnesium 12											27 **Al** Aluminium 13	28 **Si** Silicon 14	31 **P** Phosphorus 15	32 **S** Sulfur 16	35.5 **Cl** Chlorine 17	40 **Ar** Argon 18
39 **K** Potassium 19	40 **Ca** Calcium 20	45 **Sc** Scandium 21	48 **Ti** Titanium 22	51 **V** Vanadium 23	52 **Cr** Chromium 24	55 **Mn** Manganese 25	56 **Fe** Iron 26	59 **Co** Cobalt 27	59 **Ni** Nickel 28	64 **Cu** Copper 29	65 **Zn** Zinc 30	70 **Ga** Gallium 31	73 **Ge** Germanium 32	75 **As** Arsenic 33	79 **Se** Selenium 34	80 **Br** Bromine 35	84 **Kr** Krypton 36
85 **Rb** Rubidium 37	88 **Sr** Strontium 38	89 **Y** Yttrium 39	91 **Zr** Zirconium 40	93 **Nb** Niobium 41	96 **Mo** Molybdenum 42	98 **Tc** Technetium 43	101 **Ru** Ruthenium 44	103 **Rh** Rhodium 45	106 **Pd** Palladium 46	108 **Ag** Silver 47	112 **Cd** Cadmium 48	115 **In** Indium 49	119 **Sn** Tin 50	122 **Sb** Antimony 51	128 **Te** Tellurium 52	127 **I** Iodine 53	131 **Xe** Xenon 54
133 **Cs** Caesium 55	137 **Ba** Barium 56	139 **La*** Lanthanum 57	178 **Hf** Hafnium 72	181 **Ta** Tantalum 73	184 **W** Tungsten 74	186 **Re** Rhenium 75	190 **Os** Osmium 76	192 **Ir** Iridium 77	195 **Pt** Platinum 78	197 **Au** Gold 79	201 **Hg** Mercury 80	204 **Tl** Thallium 81	207 **Pb** Lead 82	209 **Bi** Bismuth 83	210 **Po** Polonium 84	210 **At** Astatine 85	222 **Rn** Radon 86
223 **Fr** Francium 87	226 **Ra** Radium 88	227 **Ac†** Actinium 89	261 **Rf** Rutherfordium 104	262 **Db** Dubnium 105	266 **Sg** Seaborgium 106	264 **Bh** Bohrium 107	277 **Hs** Hassium 108	268 **Mt** Meitnerium 109	271 **Ds** Darmstadtium 110	272 **Rg** Roentgenium 111	285 **Cn** Copernicium 112						

140 **Ce** Cerium 58	141 **Pr** Praseodymium 59	144 **Nd** Neodymium 60	145 **Pm** Promethium 61	150 **Sm** Samarium 62	152 **Eu** Europium 63	157 **Gd** Gadolinium 64	159 **Tb** Terbium 65	162 **Dy** Dysprosium 66	165 **Ho** Holmium 67	167 **Er** Erbium 68	169 **Tm** Thulium 69	173 **Yb** Ytterbium 70	175 **Lu** Lutetium 71
232 **Th** Thorium 90	231 **Pa** Protactinium 91	238 **U** Uranium 92	237 **Np** Neptunium 93	242 **Pu** Plutonium 94	243 **Am** Americium 95	247 **Cm** Curium 96	245 **Bk** Berkelium 97	251 **Cf** Californium 98	254 **Es** Einsteinium 99	253 **Fm** Fermium 100	256 **Md** Mendelevium 101	254 **No** Nobelium 102	257 **Lr** Lawrencium 103

* 58 – 71 Lanthanum series
† 90 – 103 Actinium series

a X b

a = relative atomic mass (approx)
x = atomic symbol
b = atomic number