Rewarding Learning

ADVANCED SUBSIDIARY (AS)
General Certificate of Education
2025

Centre Number

Candidate Number

Physics

StemUp Model Solution

Assessment AS 3A
assessing
Practical Techniques
and Data Analysis

[SPH31]

SPH31

TUESDAY 6 MAY, MORNING

TIME

1 hour.

INSTRUCTIONS TO CANDIDATES

You must not communicate with any other candidate.
Write your Centre Number and Candidate Number in the spaces provided at the top of this page.
You must answer the questions in the spaces provided.
Do not write outside the boxed area on each page, or on blank pages.
Complete questions in black ink and use a dark HB pencil for drawings and graphs.
Do not write with a gel pen.
The Teacher/Supervisor will tell you the order in which you are to answer the questions.
One hour is to be spent on four short experimental tests.
After 12 minutes you must stop using the apparatus so that it can be rearranged for the next candidate. At 14 minutes you will be instructed to move to the station for the next question.
At the end of the test a 4 minute period will be provided for you to complete your answer to any question, but you will not have access to the apparatus during this time.

INFORMATION FOR CANDIDATES

The total mark for this paper is 40.
Figures in brackets printed down the right-hand side of pages indicate the marks awarded to each question or part question.
You may use a scientific calculator.

14728

1 In this experiment you will determine a value for the refractive index of a prism.

You have been provided with a triangular prism, a ray box, a power supply, a protractor and a 30 cm ruler.

(a) **Fig. 1.1** shows a prism with the corners labelled A, B and C.

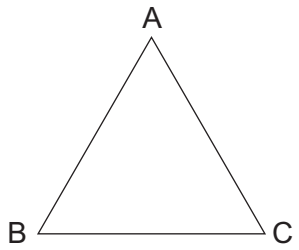

Fig. 1.1

Place the top of the prism in the position indicated in **Fig. 1.2**.

Draw around the prism and label the corners B and C.

Remove the prism and use the protractor to draw a normal **halfway** along AB.

Draw a line to represent an incident ray at an angle of incidence i = 50° below the normal.

Replace the prism.

Using the ray box direct a ray of light towards side AB of the prism along the line representing the incident ray.

Mark suitable points to allow you to draw the emergent ray exiting from side AC.

Remove the prism and construct the path of the refracted ray through the prism.

Using **Fig. 1.3**, repeat the above procedure for an angle of incidence i = 65°. [5]

stemup.co.uk *16SPH3102*

Angle of incidence = 50°

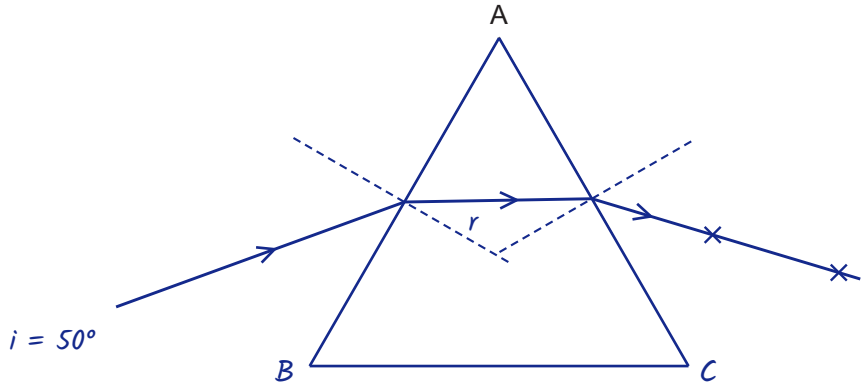

Fig. 1.2

Angle of incidence = 65°

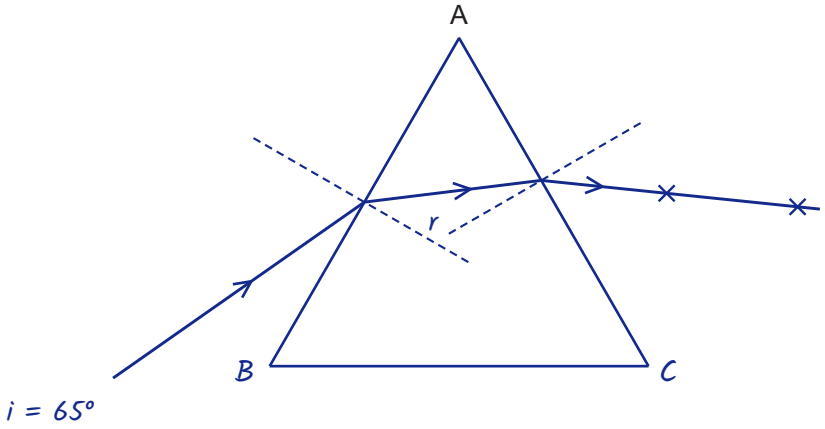

Fig. 1.3

[Turn over

(b) Measure the angles of refraction r after entry into the prism at side AB.
(You may need to extend the refracted rays to allow you to use the protractor properly.)
Record your results in **Table 1.1**.

Table 1.1

Angle of incidence i / °	Angle of refraction r / °
50	31
65	37

[2]

(c) Use both results in **Table 1.1** to determine a reliable value for the refractive index of the prism.

$n = \sin i / \sin r$

$i = 50°$: $n = \sin 50° / \sin 31° = 0.766 / 0.515 = 1.49$

$i = 65°$: $n = \sin 65° / \sin 37° = 0.906 / 0.602 = 1.51$

mean $n = (1.487 + 1.506) / 2 = 1.497$

Refractive index = 1.50 [3]

stemup.co.uk *16SPH3104*

2 In this experiment you will investigate how the period of oscillation of a mass on a spring varies with the length of the spring.

A ruler is clamped, and a spring is slid onto the ruler as shown in **Fig. 2.1**.
(The string is a safety measure to prevent the spring slipping off the ruler).

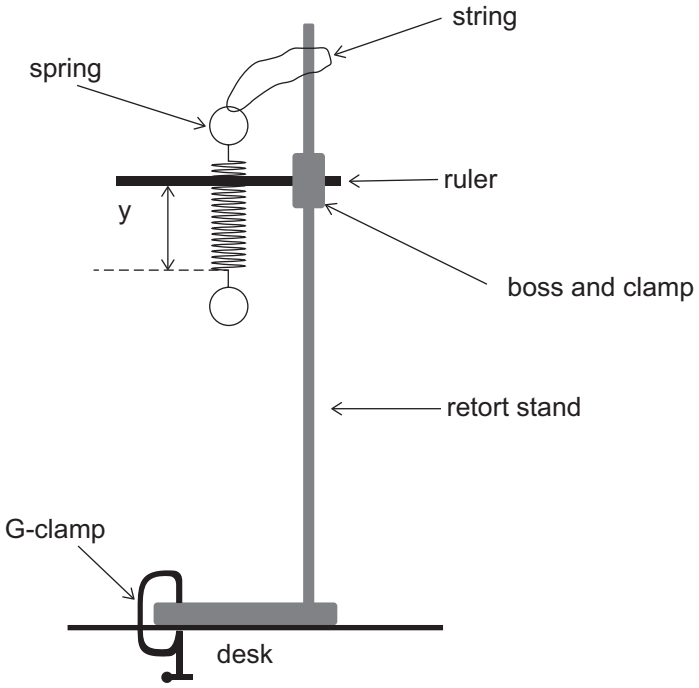

Fig. 2.1

(a) Use the half metre rule to measure the distance y from the ruler to the lower end of the **coiled part** of the spring as shown in **Fig. 2.1**. Record this value in **Table 2.1**.

Put on safety glasses.
Then attach the 500 g mass to the lower end of the spring as shown in **Fig. 2.2**.

Displace the mass a small vertical distance downwards and release it. Take readings that will allow you to determine an accurate and reliable value for the period of oscillation T of the mass. The period of oscillation is the time taken for the mass to move from A to B and back to A again as shown in **Fig. 2.2**.

[Turn over

stemup.co.uk

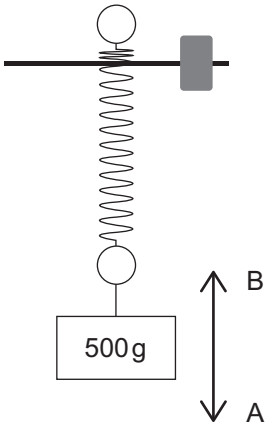

Fig. 2.2

Record **all** your results in **Table 2.1**.

Remove the mass from the spring.

Slide the spring off the ruler.

Replace the spring onto the ruler so that it is approximately halfway down the spring and the y value is reduced.

Measure and record the new y value using the half metre rule.

Then replace the mass and repeat the procedure to determine the new period of oscillation.

Table 2.1

y / mm	Time for 10 oscillations, 10T / s	T / s	T^2 / s^2
27	9.69, 9.75, 9.72 mean = 9.72	0.97	0.94
13	6.74, 6.78, 6.71 mean = 6.74	0.67	0.45

[5]

(b) It is suggested that the relationship between y and T is given by **Equation 2.1**

$$T^2 = ky \qquad \textbf{Equation 2.1}$$

where k is a constant.

(i) Calculate the value of T^2 for each value of y and insert them into the final column of **Table 2.1**. Include a unit in the column heading. [2]

(ii) Use your results to determine whether **Equation 2.1** is correct or incorrect.
Show the calculations used to make your decision.
Explain your reasoning.

If $T^2 = ky$ then $k = T^2 / y$ should be the same for both lengths.

$y = 27$ mm: $k = 0.94 / 27 = 0.0348\ s^2\ mm^{-1}$

$y = 13$ mm: $k = 0.45 / 13 = 0.0346\ s^2\ mm^{-1}$

Difference $= 0.0002\ s^2\ mm^{-1}$, which is less than 1% of k.

Equation 2.1 is correct.

Explanation:

Both values of k are the same (about $0.035\ s^2\ mm^{-1}$) within experimental uncertainty, so T^2 is directly proportional to y and the equation is correct. [3]

[Turn over

3 In this experiment you will determine a value for the density of rubber.

You have been provided with a hollow hemisphere in the form of half a squash ball, a set of scales and vernier calipers.

The volume V of material in the hollow hemisphere is given by **Equation 3.1**

$$V = \frac{\pi}{12}(D^3 - d^3) \qquad \textbf{Equation 3.1}$$

where D is the external diameter of the hemisphere and d is the internal diameter of the hemisphere, as shown in **Fig. 3.1**.

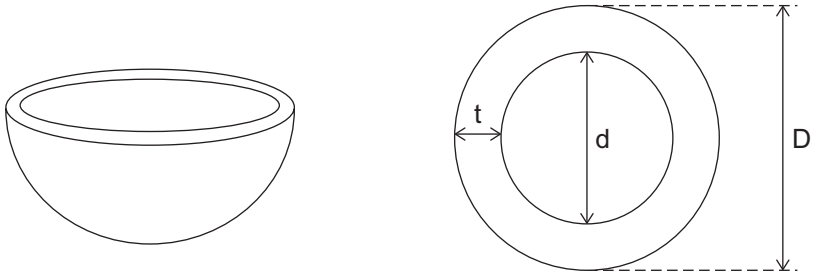

Fig. 3.1

(a) Use the scales to measure the mass of the hemisphere.

Mass = 11.6 g [1]

(b) (i) Use the vernier calipers to measure the external diameter D of the hemisphere.

D = 40.3 mm [1]

(ii) State the uncertainty in the vernier calipers.

Uncertainty = ± 0.1 mm [1]

(iii) Describe a difficulty that causes an additional uncertainty when measuring the external diameter D.

The rubber ball is soft, so it is squashed (deforms) when the jaws of the calipers are closed on it, giving a smaller reading than the true diameter. [1]

(c) (i) Use the vernier calipers to determine a **reliable** value for the thickness t of the hemisphere.

Readings at three different places around the rim:

t = 4.8 mm, 4.9 mm, 4.7 mm

mean t = (4.8 + 4.9 + 4.7) / 3 = 4.8 mm

t = 4.8 mm [2]

(ii) Use your answers to **(b)(i)** and **(c)(i)** to calculate a value for the internal diameter d of the hemisphere.

$d = D - 2t$

$d = 40.3 - (2 \times 4.8) = 40.3 - 9.6$

d = 30.7 mm [2]

(d) Use your answers to **(a)**, **(b)(i)** and **(c)(ii)** to calculate the density of the rubber. The density of a material is given by **Equation 3.2**.

$$\text{Density} = \frac{\text{mass}}{\text{volume}} \qquad \textbf{Equation 3.2}$$

$V = (\pi/12)(D^3 - d^3) = (\pi/12)(40.3^3 - 30.7^3)$

$V = (\pi/12)(65\ 451 - 28\ 934) = 9560\ mm^3$

Density = mass / volume = 11.6 / 9560

Density $= 1.21 \times 10^{-3}\ g\ mm^{-3}$

Density = 1.21×10^{-3} g mm^{-3} [2]

[Turn over

4 In this experiment you will use two methods to determine the resistance of an unknown resistor.

Method 1

You have been provided with a cell, a resistor R_1 with value 47 Ω, an unknown resistor R_2 and a voltmeter.

The circuit in **Fig. 4.1** has been set up for you.

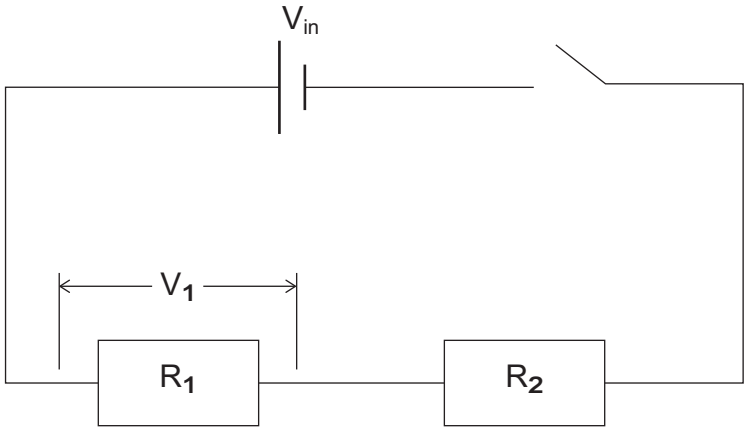

Fig. 4.1

(a) (i) Connect the voltmeter to allow you to measure the potential difference V_{in} across the cell.
Close the switch and record the value of V_{in} in **Table 4.1**.
Move the voltmeter to measure the potential difference V_1 across resistor R_1.
Close the switch and record the value of V_1 in **Table 4.1**.

Table 4.1

R_1 / Ω	V_{in} / V	V_1 / V
47	1.54	0.70

[2]

(ii) The value of the unknown resistor R_2 is related to V_1, V_{in} and R_1 by **Equation 4.1**.

$$R_2 = R_1 \left[\frac{V_{in}}{V_1} - 1 \right] \qquad \textbf{Equation 4.1}$$

Use **Equation 4.1** to calculate the value of R_2 from the results in **Table 4.1**.

$R_2 = R_1 (V_{in} / V_1 - 1)$

$R_2 = 47 \times (1.54 / 0.70 - 1)$

$R_2 = 47 \times (2.20 - 1) = 47 \times 1.20 = 56.4\ \Omega$

$R_2 =$ 56 Ω [2]

[Turn over

Method 2
You have also been provided with a milliammeter labelled mA.

(b) (i) Draw a circuit diagram of a suitable circuit that can be used to determine the resistance of R2 using the ammeter–voltmeter method.

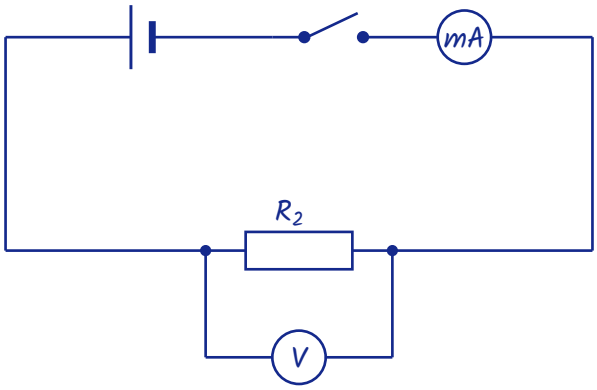

[2]

(ii) Set up the circuit you have drawn using components provided for Method 1 and the milliammeter. Record appropriate results and use them to determine a value for R2.

Voltmeter reading across R_2: $V = 1.48$ V

Milliammeter reading: $I = 26.5$ mA $= 26.5 \times 10^{-3}$ A $= 0.0265$ A

$R_2 = V / I$

$R_2 = 1.48 / 0.0265 = 55.8\ \Omega$

R2 = 56 Ω [3]

(c) Method 2 will give a more accurate result for the value of the unknown resistor R2.

Explain why this is the case.

Method 1 uses the extra resistor R_1, whose value of 47 Ω has its own (tolerance) uncertainty, and this adds to the uncertainty in R_2. Method 2 does not need R_1. [1]

THIS IS THE END OF THE QUESTION PAPER

BLANK PAGE

DO NOT WRITE ON THIS PAGE

BLANK PAGE

DO NOT WRITE ON THIS PAGE

DO NOT WRITE ON THIS PAGE

For Examiner's use only		
Question Number	Marks	Remark
1		
2		
3		
4		
Total Marks		

Permission to reproduce all copyright material has been applied for.
In some cases, efforts to contact copyright holders may have been unsuccessful and CCEA will be happy to rectify any omissions of acknowledgement in future if notified.

stemup.co.uk

Rewarding Learning

ADVANCED SUBSIDIARY
General Certificate of Education

Physics

Assessment Units AS 1 and AS 2

[SPH11/SPH21]

DATA AND FORMULAE SHEET

stemup.co.uk

Data and Formulae Sheet for AS 1 and AS 2

Values of constants

speed of light in a vacuum	$c = 3.00 \times 10^{8}$ m s^{-1}
elementary charge	$e = 1.60 \times 10^{-19}$ C
the Planck constant	$h = 6.63 \times 10^{-34}$ J s
mass of electron	$m_e = 9.11 \times 10^{-31}$ kg
mass of proton	$m_p = 1.67 \times 10^{-27}$ kg
acceleration of free fall on the Earth's surface	$g = 9.81$ m s^{-2}
electron volt	1 eV $= 1.60 \times 10^{-19}$ J
the Hubble constant	$H_0 \approx 2.4 \times 10^{-18}$ s^{-1}

Useful formulae

The following equations may be useful in answering some of the questions in the examination:

Mechanics

conservation of energy	$\frac{1}{2}mv^2 - \frac{1}{2}mu^2 = Fs$ for a constant force

Waves

two-source interference	$\lambda = \frac{ay}{d}$
diffraction grating	$d \sin\theta = n\lambda$

stemup.co.uk

Light

lens equation $\frac{1}{u} + \frac{1}{v} = \frac{1}{f}$

Electricity

terminal potential difference $V = E - Ir$ (e.m.f., E; Internal Resistance, r)

potential divider $V_{out} = \frac{R_1 V_{in}}{R_1 + R_2}$

Particles and photons

Einstein's equation $\frac{1}{2} m v_{max}^2 = hf - hf_0$

de Broglie equation $\lambda = \frac{h}{p}$

Astronomy

red shift $z = \frac{\Delta\lambda}{\lambda}$

recession speed $z = \frac{v}{c}$

Hubble's law $v = H_0 d$

Rewarding Learning

ADVANCED SUBSIDIARY (AS)
General Certificate of Education
2025

Physics

Assessment Unit AS 3A

Practical Techniques and Data Analysis

[SPH31]

TUESDAY 6 MAY, MORNING

APPARATUS AND MATERIALS LIST

To be accessed by Head of Department only.

14728.02

stemup.co.uk

PHYSICS UNIT 3 (AS 3A)
APPARATUS AND MATERIALS REQUIRED FOR PRACTICAL ASSESSMENT

CONFIDENTIAL

This document gives preliminary information on the apparatus and materials required for the AS Practical Assessment.

Information about the apparatus and materials required for this assessment must NOT be communicated to students. If apparatus/materials have their serial code and/or manufacturer specified then it is essential that centres use this exact apparatus/material.

On receipt of this APPARATUS AND MATERIALS LIST, centres must contact Dr Alan McMurray, amcmurray@ccea.org.uk immediately if they have difficulty in sourcing the specified apparatus or materials.

Teachers will be given detailed instructions for setting up the experiment in the *Confidential Instructions for Physics (Advanced Subsidiary) Practical Test*, to which they will have confidential access from April 2025.

Teachers will have confidential access to a copy of the experimental test two working days (48 hours) before the start of the assessment.

The AS 3 Practical Techniques Assessment is a test of practical skills consisting of 4 short experimental tests (40 marks). The duration of the assessment is 1 hour.

stemup.co.uk

The apparatus in the following list will allow for **one experiment** to be set up for the practical test which makes up questions 1–4. In other words, each set of apparatus (as listed on **pages 4 and 5**) will accommodate four candidates when doing the circus of experiments.

The apparatus can be used for alternative sessions according to the following schedule:

Tuesday 6 May, morning Physics AS 3A (SPH31)

(Main Session) **9.15 am–10.15 am**
(First Alternative) **10.30 am–11.30 am**
(Second Alternative) **11.45 am–12.45 pm**
(Third Alternative) **1.15 pm–2.15 pm**
(Fourth Alternative) **2.30 pm–3.30 pm**

One set of apparatus for AS 3A (SPH31) will therefore be sufficient for twenty candidates on **Tuesday 6 May**, if the Main Session and all four alternatives are used. A laboratory may contain one, two, three or more sets of apparatus. This means that four, eight, twelve or more candidates can be accommodated in the same session. **To maintain the confidentiality of details of the practical tests, candidates entered for any of the alternative sessions must be segregated within the centre so that there can be no communication with candidates who have taken an earlier test in any centre.**

IMPORTANT NOTICE
Centres are urged to order items needed for the Physics Practical Tests from the suppliers as soon as possible.

stemup.co.uk

Question 1

Requirements

- Equilateral triangular prism (60°) × 1
  Refractive index 1.4–1.6
  Length of side at least 38 mm
  Example: Philip Harris B8A45597 / B8A45639 or B8A45603 / B8A45640
- Ray box with single slit × 1
- Power supply for ray box × 1 [12V D.C.]
- 30 cm ruler × 1
- Protractor (smallest division 1°) × 1

Question 2

Requirements

- Extension spring, coil length ≈ 20 mm × 1
- 100g mass hanger × 1
- 100g masses × 4
- 15 cm shatter resistant ruler × 1
- Retort stand, boss and clamp × 1
- Half metre rule (to 1mm) × 1
- Stop clock (to 0.01s) × 1
- G-clamp × 1
- String
- Safety glasses

Question 3

Requirements

- Squash ball (any dot colour) × 1
  (One will provide equipment for two sets of apparatus)
- Electronic scales measuring to 0.1 g or 0.01 g × 1
- Vernier calipers × 1

Question 4

Requirements

- 56 Ω resistor × 1
- 47 Ω resistor × 1
- Component holder × 2
- Connecting leads × 6
- Switch × 1
- Digital Voltmeter 0 to 20V (to 0.01V) × 1
- Digital Milliammeter 0 to 200 mA (to 0.1 mA) × 1
- 1.5 V cell in holder × 1

Rewarding Learning

ADVANCED SUBSIDIARY (AS)
General Certificate of Education
2025

Physics

Assessment Unit AS 3A

Practical Techniques and Data Analysis

[SPH31]

TUESDAY 6 MAY, MORNING

CONFIDENTIAL INSTRUCTIONS

14728.03

stemup.co.uk

1 Confidential Instructions

These instructions will give detailed guidance on setting up and testing the apparatus and materials to be used. **Again, information contained within the Confidential Instructions must not be relayed to candidates under any circumstances**. If at this point, centres find that the testing process produces results different to those specified in the Confidential Instructions, they must contact the CCEA Physics Subject Officer Dr Alan McMurray(amcmurray@ccea.org.uk) immediately.

2 Final Apparatus Testing

The practical assessment question paper will be made available to the Head of Physics **two** working days before the timetabled starting time so that teachers and technicians can carry out a final test on the experiments. If on checking the apparatus gives unexpected results, the CCEA Physics Subject Officer should be contacted immediately (amcmurray@ccea.org.uk). If the problem cannot be resolved, then the centre must e-mail the CCEA Physics Subject Officer stating the centre name and number, the specific nature of the problem and the range of anomalous results produced. CCEA will respond by acknowledging receipt of the e-mail. If you do not receive a response within 24 hours, please contact the CCEA Physics Subject Officer by telephone (028 95906548) to confirm that CCEA has received your e-mail.

3 Practical Assessment AS 3A

The AS 3A Practical Techniques Assessment is a test of practical skills comprised of 4 short experimental tests. The duration of the assessment is 1 hour. Some of this time will be set aside for supervisors to re-set the apparatus ready for the next candidates. The assessment should be run as a circus of experiments with candidates moving to the next experiment at the designated time. Candidates should work individually and there should be no communication between candidates at any point during the assessment. If candidates are unable to obtain a set of results candidates **should not** be provided with sample results. The assessment should be timed as follows:

Questions	**Time**
Q1 (Short practical test)	12 minutes
Changeover and practical write-up	2 minutes
Q2 (Short practical test)	12 minutes
Changeover and practical write-up	2 minutes
Q3 (Short practical test)	12 minutes
Changeover and practical write-up	2 minutes
Q4 (Short practical test)	12 minutes
Changeover and practical write-up	2 minutes
End of test write-up	4 minutes

At the end of each 12 minute period, candidates must stop using the apparatus. During each 2 minute changeover period candidates may write up anything they have not completed however they will not have access to the apparatus.

At the end of the test a 4 minute period is provided for candidates to complete their answer to any question, however they will not have access to the apparatus.

stemup.co.uk

4 After the Practical Assessments

When the individual exam sessions have finished, please return the AS 3A practical scripts together with the corresponding advice notes to the examinations officer (EO). We will collect these by the day after the examination. If we don't, please contact us immediately to arrange another time for collection.

Where the centre finds that a candidate may have been disadvantaged because the apparatus did not function as intended, the supervising teachers should make a report to the EO. The EO will forward the confidential report on the issue and the candidates affected to the centre support section at CCEA for special consideration. Candidates should be identified by their examination number.

IMPORTANT NOTICE
Centres are urged to order items needed for the Physics Practical Tests from the suppliers as soon as possible.

Question 1

Requirements

- Equilateral triangular prism (60°) × 1
  Refractive index 1.4–1.6
  Length of side at least 38 mm
  Example: Philip Harris B8A45597 / B8A45639 or B8A45603 / B8A45640

- Ray box with single slit × 1

- Power supply for ray box × 1 [12V D.C.]

- 30 cm ruler × 1

- Protractor (smallest division 1°) × 1

Preparation

Connect the power supply to the ray box and insert the single slit into the ray box.
Ensure that the ray box is bright enough to allow an emergent ray to be observed when a ray of light is incident on the prism.
Place the prism, 30 cm ruler and protractor on the desk.

Action at changeover

Return the apparatus to the original arrangement.

Question 2

Requirements

- Extension spring, coil length ≈ 20 mm × 1
- 100g mass hanger × 1
- 100g masses × 4
- 15 cm shatter resistant ruler × 1
- Retort stand, boss and clamp × 1
- Half metre rule (to 1mm) × 1
- Stop clock (to 0.01s) × 1
- G-clamp × 1
- String
- Safety glasses

Preparation

Secure the retort stand, boss and clamp to the desk using the G-clamp.
Insert the ruler into the spring so that the ruler is approximately 18 mm above the lower end of the coiled part of the spring as indicated in **Fig. 2.1**.
Clamp the ruler securely so that it is angled slightly upwards as shown in **Fig. 2.2**.
Limit the length of the ruler on the side the spring is placed so it does not bend when the 500 g mass is added as shown in **Fig. 2.2**.
Attach a piece of string from the top of the spring to the retort stand. The string is a safety measure to keep the spring attached to the retort stand if it slips off the ruler during oscillations. The loop of string should be large enough to allow the spring to be removed from the ruler and replaced at a different position on the ruler.
Place the four 100 g masses onto the mass hanger.
Suspend the 500 g mass from the lower end of the spring and ensure the clamp is high enough to prevent the mass touching the desk when set into oscillation.
Ensure the spring is pushed back on the ruler so that the spring does not fall off when a mass of 500 g is set into oscillation.

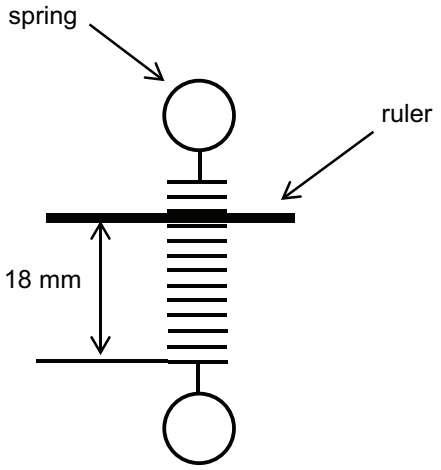

Fig. 2.1

stemup.co.uk

front view

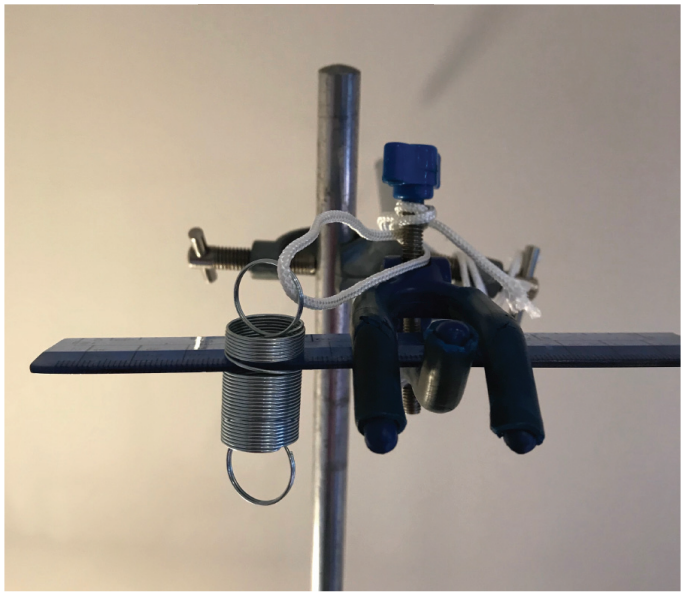

side view

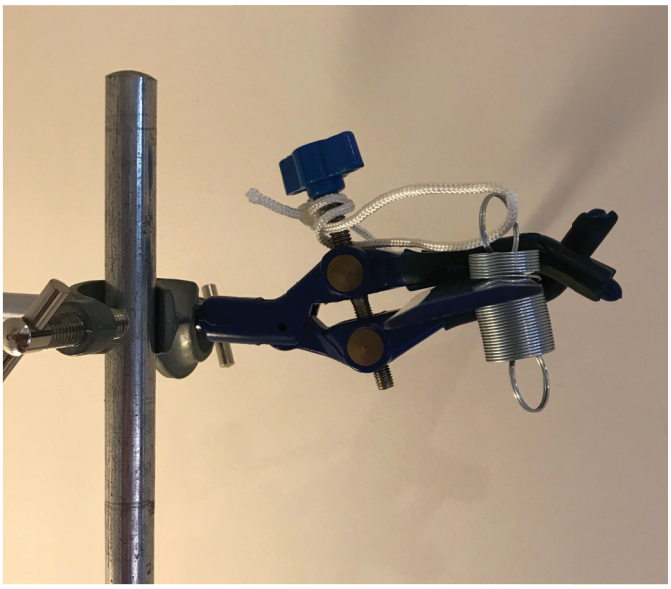

Fig. 2.2

Set the stop clock to zero.
Place the half metre rule, stop clock and 500g mass adjacent to the retort stand.

Action at changeover
Return the apparatus to the original arrangement.

Question 3

Requirements

- Squash ball (any dot colour) × 1
  (One will provide equipment for two sets of apparatus)

- Electronic scales measuring to 0.1 g or 0.01 g × 1

- Vernier calipers × 1

Preparation

Cut the squash ball in half to produce two hollow hemispheres.
Set the scales to zero.
Place the half squash ball and vernier calipers on the desk beside the scales.

Action at changeover

Return the apparatus to the original arrangement.

Question 4

Requirements

- 56Ω resistor × 1
- 47Ω resistor × 1
- Component holder × 2
- Connecting leads × 6
- Switch × 1
- Digital Voltmeter 0 to 20V (to 0.01V) × 1
- Digital Milliammeter 0 to 200mA (to 0.1mA) × 1
- 1.5V cell in holder × 1

Preparation
Cover up all markings on the 56Ω resistor.
Place the 56Ω resistor in a component holder and label it R_2.
Place the 47Ω resistor in a component holder and label it R_1 = 47Ω.
Label the voltmeter V.
Label the milliammeter mA.

Set up the circuit shown in **Fig. 4.1**.

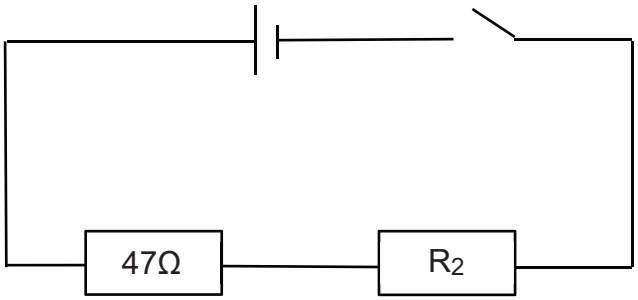

Fig. 4.1

Connect the voltmeter across the 1.5V cell.
Close the switch and check that the voltmeter shows a reading.
Repeat for the 47Ω resistor.
Remove the voltmeter from the circuit.

Leave the circuit of **Fig. 4.1** on the desk.
Place the voltmeter, milliammeter and 2 connecting leads beside the circuit.

Action at changeover
Return the apparatus to the original arrangement.

Rewarding Learning

ADVANCED SUBSIDIARY (AS)
General Certificate of Education
2025

Centre Number

Candidate Number

Physics

Assessment AS 3A
assessing
Practical Techniques
and Data Analysis

[SPH31]

TUESDAY 6 MAY, MORNING

TEACHER'S COPY

Not to be used by candidates

Please Note: This Teacher's Copy only shows the minimum information required to test the practical work in advance of the exam sitting. As information has been removed, the question numbering may not be consistent.

14728.04

stemup.co.uk

1 You have been provided with a triangular prism, a ray box, a power supply, a protractor and a 30 cm ruler.

Fig. 1.1 shows a prism with the corners labelled A, B and C.

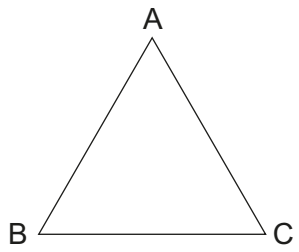

Fig. 1.1

Place the top of the prism in the position indicated in **Fig. 1.2**.

Draw around the prism and label the corners B and C.

Remove the prism and use the protractor to draw a normal **halfway** along AB.

Draw a line to represent an incident ray at an angle of incidence i = 50° below the normal.

Replace the prism.

Using the ray box direct a ray of light towards side AB of the prism along the line representing the incident ray.

Mark suitable points to allow you to draw the emergent ray exiting from side AC.

Remove the prism and construct the path of the refracted ray through the prism.

Using **Fig. 1.3**, repeat the above procedure for an angle of incidence i = 65°.

stemup.co.uk

Angle of incidence = 50°

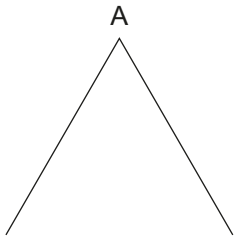

Fig. 1.2

Angle of incidence = 65°

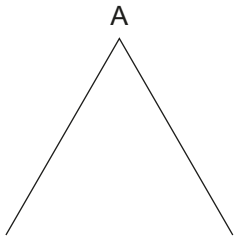

Fig. 1.3

stemup.co.uk

2 A ruler is clamped, and a spring is slid onto the ruler as shown in **Fig. 2.1**.
(The string is a safety measure to prevent the spring slipping off the ruler).

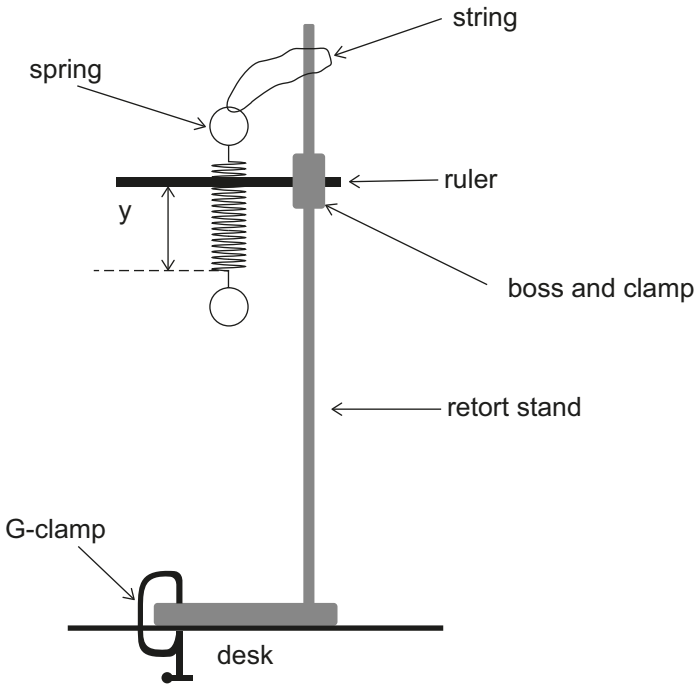

Fig. 2.1

Use the half metre rule to measure the distance y from the ruler to the lower end of the **coiled part** of the spring as shown in **Fig. 2.1**. Record this value in **Table 2.1**.

Put on safety glasses.
Then attach the 500 g mass to the lower end of the spring as shown in **Fig. 2.2**.

Displace the mass a small vertical distance downwards and release it. Take readings that will allow you to determine an accurate and reliable value for the period of oscillation T of the mass. The period of oscillation is the time taken for the mass to move from A to B and back to A again as shown in **Fig. 2.2**.

stemup.co.uk

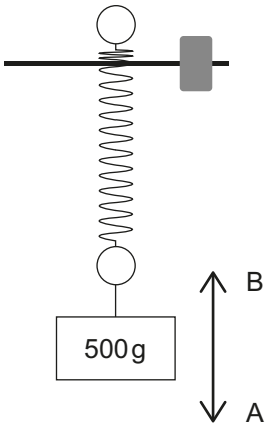

Fig. 2.2

Record **all** your results.

Remove the mass from the spring.

Slide the spring off the ruler.

Replace the spring onto the ruler so that it is approximately halfway down the spring and the y value is reduced.

Measure and record the new y value using the half metre rule.

Then replace the mass and repeat the procedure to determine the new period of oscillation.

stemup.co.uk

3 You have been provided with a hollow hemisphere in the form of half a squash ball, a set of scales and vernier calipers.

D is the external diameter of the hemisphere and d is the internal diameter of the hemisphere, as shown in **Fig. 3.1**.

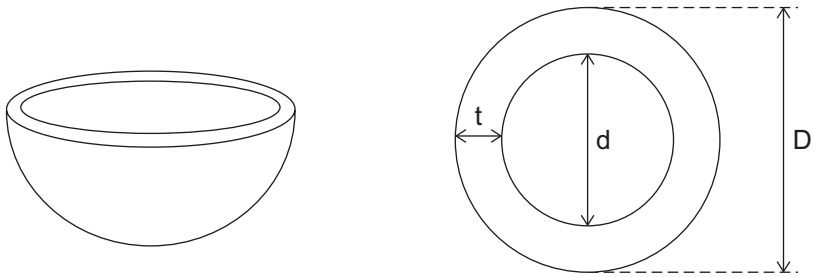

Fig. 3.1

Use the scales to measure the mass of the hemisphere.

Mass = _____ g

Use the vernier calipers to measure the external diameter D of the hemisphere.

D = _____ mm

Use the vernier calipers to measure the thickness t of the hemisphere.

t = _____ mm

stemup.co.uk

BLANK PAGE

DO NOT WRITE ON THIS PAGE

(Questions continue overleaf)

stemup.co.uk

4 Method 1

You have been provided with a cell, a resistor R_1 with value 47 Ω, an unknown resistor R_2 and a voltmeter.

The circuit in **Fig. 4.1** has been set up for you.

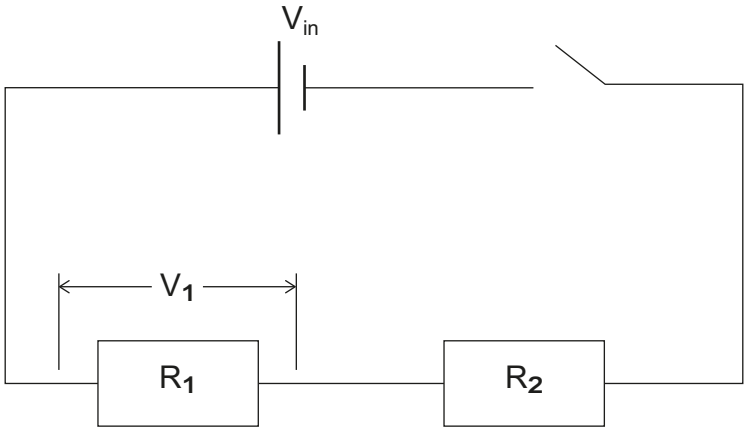

Fig. 4.1

Connect the voltmeter to allow you to measure the potential difference V_{in} across the cell.

Close the switch and record the value of V_{in} in **Table 4.1**.

Move the voltmeter to measure the potential difference V_1 across resistor R_1. Close the switch and record the value of V_1 in **Table 4.1**.

Table 4.1

R_1 / Ω	V_{in} / V	V_1 / V
47		

stemup.co.uk

Method 2
You have also been provided with a milliammeter labelled mA.

Determine the resistance of R_2 using the ammeter–voltmeter method.

THIS IS THE END OF THE QUESTION PAPER

stemup.co.uk

Permission to reproduce all copyright material has been applied for.
In some cases, efforts to contact copyright holders may have been unsuccessful and CCEA will be happy to rectify any omissions of acknowledgement in future if notified.

14728.04