Rewarding Learning

ADVANCED SUBSIDIARY (AS)
General Certificate of Education
2024

Centre Number

Candidate Number

Mathematics

Assessment Unit AS 2

assessing

Applied Mathematics

[SMT21]

SMT21

TUESDAY 28 MAY, AFTERNOON

TIME

1 hour 15 minutes.

INSTRUCTIONS TO CANDIDATES

Write your Centre Number and Candidate Number in the spaces provided at the top of this page.
You must answer the questions in the spaces provided.
Do not write outside the boxed area on each page or on blank pages.
Complete in black ink only. **Do not write with a gel pen.**
Questions which require drawing or sketching should be completed using an HB pencil.
Candidates must answer **all** questions from sections A and B.
Equal time should be spent on each section. Show clearly the full development of your answers.
Answers without working may not gain full credit.
Answers should be given to three significant figures unless otherwise stated.
You are permitted to use a graphic or scientific calculator in this paper.

INFORMATION FOR CANDIDATES

The total mark for this paper is 70. The total available mark for each section of this paper is 35.
Figures in brackets printed down the right-hand side of pages indicate the marks awarded to each question or part question.
Answers should include diagrams where appropriate and marks may be awarded for them.
Take $g = 9.8\,\text{m}\,\text{s}^{-2}$, unless specified otherwise.
A copy of the **Mathematical Formulae and Tables booklet** is provided.
Throughout the paper the logarithmic notation used is $\ln z$ where it is noted that $\ln z \equiv \log_e z$

13721.08 **RR**

Answer all questions.

SECTION A

Mechanics

1 A particle P of mass 6 kg is moving under the action of a constant force, **F** newtons.

At time $t = 0$ seconds the velocity of P is $(6\mathbf{i} - 5\mathbf{j})\,\mathrm{m\,s^{-1}}$

When $t = 8$, P has a velocity of $(14\mathbf{i} - 21\mathbf{j})\,\mathrm{m\,s^{-1}}$

(i) Find the acceleration of P, giving your answer in the form $(a\mathbf{i} + b\mathbf{j})$. [2]

.....

.....

.....

.....

.....

.....

.....

.....

.....

.....

.....

.....

.....

.....

.....

.....

.....

.....

.....

.....

.....

(ii) Find the magnitude and direction of **F**. [4]

2 Adam and Ben are competing in a cycle race.

They are both sitting on their bikes at the starting line of a straight horizontal racetrack with the finish line 100 m away.

At time $t = 0$ seconds, Adam starts from rest and accelerates uniformly for four seconds to a maximum velocity of $10\,\mathrm{m\,s^{-1}}$ and then maintains this velocity until he crosses the finish line.

At time $t = 0$, Ben starts from rest and accelerates uniformly at $2\,\mathrm{m\,s^{-2}}$ until he crosses the finish line.

(i) Sketch a velocity–time graph for Adam's motion. [1]

(ii) Determine who wins the race. [6]

3 A box of mass 10 kg rests on a rough plane inclined at 30° to the horizontal.

The box is held in equilibrium by a light, inextensible string which makes an angle of 20° with the plane.

The box is on the point of sliding down the plane.

The coefficient of friction between the box and the plane is 0.4

(i) Complete the diagram below, showing all the external forces acting on the box. [2]

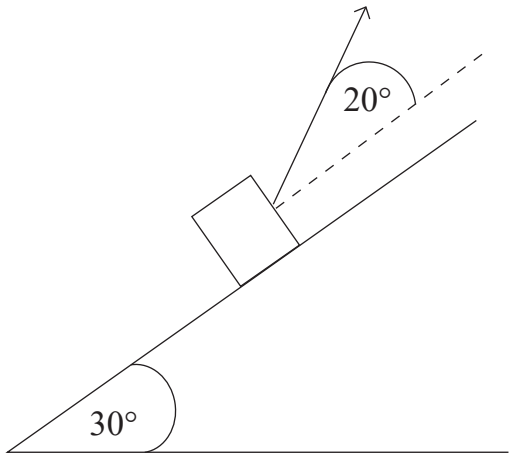

(ii) By modelling the box as a particle, find the tension in the string. [7]

.....

.....

.....

.....

.....

.....

.....

.....

.....

.....

.....

.....

[Turn over

4 **Fig. 1** below shows two particles, A and B, attached to the ends of a light, inextensible string which passes over a smooth fixed pulley.

A has mass m kg and B has mass 1.3 kg, where $m < 1.3$

Initially both particles are held, with the string taut, at a height of 2.5 m above a horizontal surface.

Both A and B are hanging d metres below the pulley, where $d > 2.5$

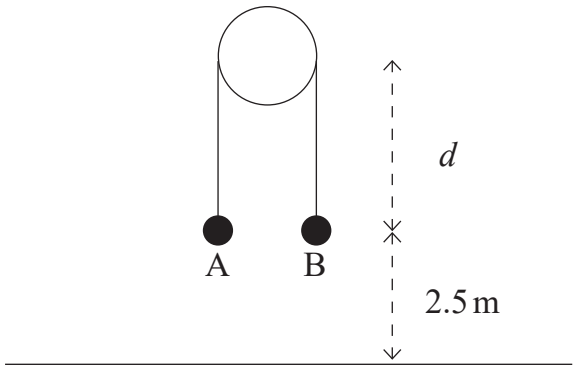

Fig. 1

The particles are released from rest and B hits the horizontal surface with a speed of $4\,\text{m}\,\text{s}^{-1}$

(i) Find the acceleration of the system as B descends towards the surface. [2]

.....

.....

.....

.....

.....

.....

.....

.....

.....

.....

For the motion prior to B hitting the surface:

(ii) complete the diagram below showing the external forces acting on A and B; [2]

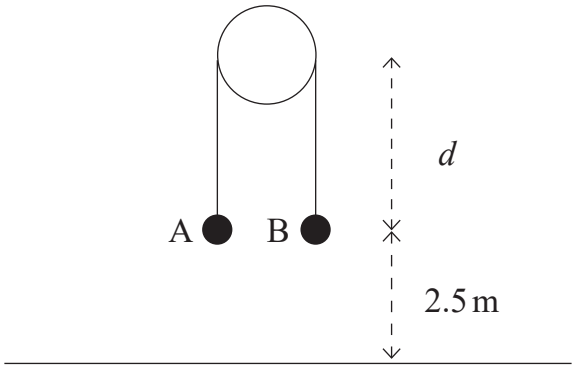

(iii) find the value of m. [5]

.....

.....

.....

.....

.....

.....

.....

.....

.....

.....

.....

.....

.....

.....

.....

.....

.....

.....

.....

[Turn over

After B hits the surface, A does not reach the pulley.

(iv) Find the minimum value of d, correct to the nearest cm, for which this is possible. [4]

[Turn over

SECTION B

Statistics

5 The cumulative frequency diagram in **Fig. 2** below shows the ages, in years, of all runners who took part in a charity race.

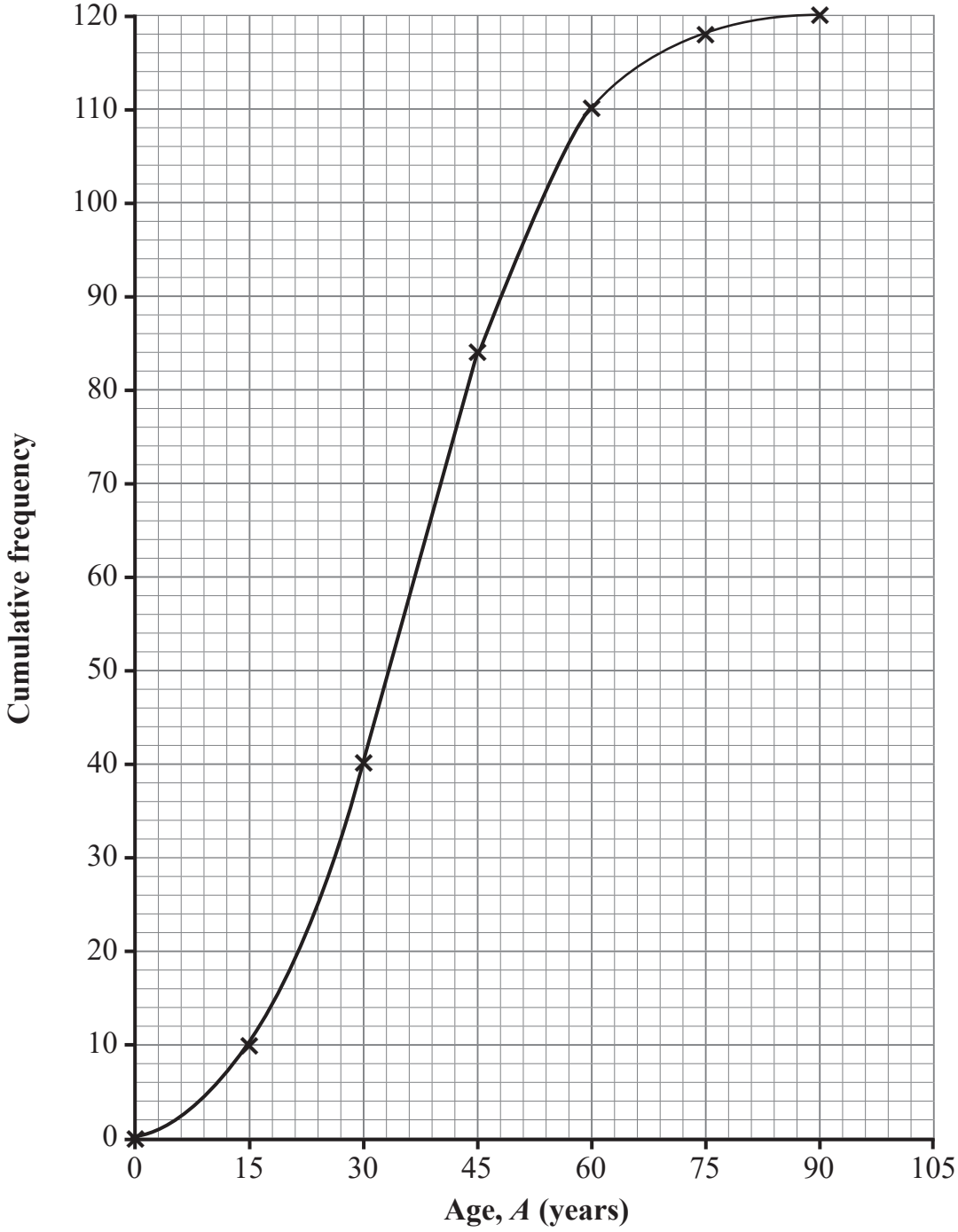

Fig. 2

For the data in the cumulative frequency diagram:

(i) show that an estimate of the mean age of the runners is 37.25 years; [4]

.....

.....

.....

.....

.....

.....

.....

.....

.....

.....

.....

.....

.....

.....

.....

(ii) calculate an estimate of the variance of the ages of the runners. [3]

.....

.....

.....

.....

.....

.....

.....

.....

.....

.....

.....

.....

For this data, an outlier is defined as any value which falls outside the range

$$Q_1 - 1.5(Q_3 - Q_1) \leqslant A \leqslant Q_3 + 1.5(Q_3 - Q_1)$$

where Q_1 and Q_3 are the values of the lower and upper quartiles respectively.

(iii) Explain why there may not be any outliers in this data. [4]

.....

.....

.....

.....

.....

.....

.....

.....

.....

.....

.....

.....

.....

.....

.....

.....

.....

.....

.....

.....

.....

.....

.....

BLANK PAGE

DO NOT WRITE ON THIS PAGE

(Questions continue overleaf)

6 As part of the appraisal process, 48 employees at a large firm were asked to rate their job satisfaction, x, on a scale of 1 (very dissatisfied) to 10 (very satisfied).

For each employee, the number of days absent from work over the past year, y, was noted.

Summary statistics were calculated and are shown in **Table 1** below.

Table 1

Σx	Σy	Σx^2	Σy^2	Σxy
220	1099	1314	33145	4939

(i) Calculate the product–moment correlation coefficient for this data. [5]

.....

.....

.....

.....

.....

.....

.....

.....

.....

.....

.....

.....

.....

.....

.....

.....

.....

.....

(ii) Give an interpretation, in context, of the value you obtained in part **(i)**. [2]

.....

.....

.....

.....

.....

.....

.....

.....

.....

.....

.....

The personnel manager tries to find the equation of the regression line for the data.

Her equation is $y = 2.8 + 0.97x$

(iii) How can you tell there is an error in this equation? [1]

.....

.....

.....

.....

.....

.....

(iv) Explain why a regression line would be inappropriate for this data. [1]

.....

.....

.....

.....

.....

.....

7 During the first three weeks of December, Amy runs a stall selling scented candles at a Christmas market. She only accepts payment for candles by cash or card.

In addition, customers can choose to have their candles gift wrapped.

Of the 115 customers who Amy served one Saturday, 48 had their candles gift wrapped, 77 paid by card and 3 customers who paid by cash did not have their candles gift wrapped.

(i) Using a Venn diagram, or otherwise, find the probability that a randomly selected customer had their candles gift wrapped and paid by card. [5]

.....

.....

.....

.....

.....

.....

.....

.....

.....

.....

.....

.....

.....

.....

.....

.....

.....

.....

.....

.....

.....

.....

Amy claims that about two-thirds of all her customers pay by card.

(ii) Explain how Amy arrived at this figure and why she may not be correct. [2]

.....

.....

.....

.....

.....

.....

.....

.....

.....

.....

.....

.....

.....

.....

.....

.....

.....

.....

.....

.....

.....

.....

.....

.....

.....

.....

.....

.....

.....

8 The probability distribution for the discrete variable X is such that

$$X \sim \text{Bin}(4, p)$$

Given that $9\text{P}(X = 3) = 4\text{P}(X = 1)$, find the value of p. [8]

THIS IS THE END OF THE QUESTION PAPER

BLANK PAGE

DO NOT WRITE ON THIS PAGE

BLANK PAGE

DO NOT WRITE ON THIS PAGE

Sources: All images © CCEA

DO NOT WRITE ON THIS PAGE

For Examiner's use only	
Question Number	**Marks**
1	
2	
3	
4	
5	
6	
7	
8	
Total Marks	

Examiner Number

Permission to reproduce all copyright material has been applied for.
In some cases, efforts to contact copyright holders may have been unsuccessful and CCEA will be happy to rectify any omissions of acknowledgement in future if notified.

Rewarding Learning

ADVANCED/ADVANCED SUBSIDIARY (A/AS)

General Certificate of Education

Mathematical Formulae and Tables

For use by candidates taking the Advanced Subsidiary and Advanced GCE examinations in Mathematics and Further Mathematics

For use from 2019

Appendix 1

BLANK PAGE

CONTENTS

	Page(s)
Pure Mathematics	**1**
Mensuration	1
Summations	1
Arithmetic Series	1
Geometric Series	1
Binomial Series	1
Logarithms and exponentials	2
Complex Numbers	2
Maclaurin's Series	2
Hyperbolic Functions	3
Trigonometry	4
Trigonometric Identities	4
Small angle approximations	4
Vectors	5
Matrix transformations	5
Differentiation	6
Integration	7
Area of a Sector	7
Numerical Mathematics	**8**
Numerical Integration	8
Numerical Solution of equations	8
Mechanics	**8**
Motion in a circle	8
Centres of Mass	8
Universal law of gravitation	8
Probability and Statistics	
Probability	9
Discrete distributions	9
Standard discrete distributions	9
Continuous distributions	9
Standard continuous distributions	10
Expectation algebra	10
Sampling distributions	10
Correlation and regression	11
Non-parametric tests	11
Statistical Tables	
Normal Probability Table	12
Binomial Cumulative Distribution function	13
Poisson Cumulative Distribution Function	18
Percentage points of the χ^2 distribution	19

Percentage points of Student's t Distribution function 20
Critical values for Correlation Coefficients 21

Discrete and Decision Mathematics **22**

Cycle indices for 3D rotational symmetry groups 22

PURE MATHEMATICS

Mensuration

Surface area of sphere = $4\pi r^2$
Area of curved surface of cone = $\pi r \times \text{slant height}$

Summations

$$\sum_{r=1}^{n} r^2 = \frac{1}{6}n(n+1)(2n+1)$$

$$\sum_{r=1}^{n} r^3 = \frac{1}{4}n^2(n+1)^2$$

Arithmetic Series

$u_n = a + (n-1)d$

$$S_n = \frac{1}{2}n(a+l) = \frac{1}{2}n\left[2a+(n-1)d\right]$$

Geometric Series

$u_n = ar^{n-1}$

$$S_n = \frac{a(1-r^n)}{1-r}$$

$S_\infty = \dfrac{a}{1-r}$ for $|r| < 1$

Binomial Series

$$\binom{n}{r} + \binom{n}{r+1} = \binom{n+1}{r+1}$$

$$(a+b)^n = a^n + \binom{n}{1}a^{n-1}b + \binom{n}{2}a^{n-2}b^2 + \ldots + \binom{n}{r}a^{n-r}b^r + \ldots + b^n \qquad (n \in \mathbb{N})$$

where $\binom{n}{r} = {}^n\mathrm{C}_r = \dfrac{n!}{r!(n-r)!}$

$$(1+x)^n = 1 + nx + \frac{n(n-1)}{1.2}x^2 + \ldots + \frac{n(n-1)\ldots(n-r+1)}{1.2\ldots r}x^r + \ldots \quad (|x| < 1, n \in \mathbb{R})$$

Logarithms and exponentials

$$e^{x \ln a} = a^x$$

Complex Numbers

$$\{r(\cos\theta + i\sin\theta)\}^n = r^n(\cos n\theta + i\sin n\theta)$$

$$e^{i\theta} = \cos\theta + i\sin\theta$$

The roots of $z^n = 1$ are given by $z = e^{\frac{2\pi k i}{n}}$, for $k = 0, 1, 2, \ldots, n-1$

Maclaurin's Series

$$f(x) = f(0) + xf'(0) + \frac{x^2}{2!}f''(0) + \ldots + \frac{x^r}{r!}f^{(r)}(0) + \ldots$$

$$e^x = \exp(x) = 1 + x + \frac{x^2}{2!} + \ldots + \frac{x^r}{r!} + \ldots \text{ for all } x$$

$$\ln(1 + x) = x - \frac{x^2}{2} + \frac{x^3}{3} - \ldots + (-1)^{r+1}\frac{x^r}{r} + \ldots \quad (-1 < x \leq 1)$$

$$\sin x = x - \frac{x^3}{3!} + \frac{x^5}{5!} - \ldots + (-1)^r\frac{x^{2r+1}}{(2r+1)!} + \ldots \text{ for all } x$$

$$\cos x = 1 - \frac{x^2}{2!} + \frac{x^4}{4!} - \ldots + (-1)^r\frac{x^{2r}}{(2r)!} + \ldots \text{ for all } x$$

$$\tan^{-1} x = x - \frac{x^3}{3} + \frac{x^5}{5} - \ldots (-1)^r\frac{x^{2r+1}}{2r+1} + \ldots \quad (-1 < x < 1)$$

$$\sinh x = x + \frac{x^3}{3!} + \frac{x^5}{5!} + \ldots + \frac{x^{2r+1}}{(2r+1)!} + \ldots \text{ for all } x$$

$$\cosh x = 1 + \frac{x^2}{2!} + \frac{x^4}{4!} + \ldots + \frac{x^{2r}}{(2r)!} + \ldots \text{ for all } x$$

$$\tanh^{-1} x = x + \frac{x^3}{3} + \frac{x^5}{5} + \ldots + \frac{x^{2r+1}}{2r+1} + \ldots \quad (-1 < x < 1)$$

Hyperbolic Functions

$\cosh^2 x - \sinh^2 x = 1$

$\sinh 2x = 2\sinh x \cosh x$

$\cosh 2x = \cosh^2 x + \sinh^2 x$

$\cosh^{-1} x = \ln\left(x + \sqrt{x^2 - 1}\right) \quad (x \geq 1)$

$\sinh^{-1} x = \ln\left(x + \sqrt{x^2 + 1}\right)$

$\tanh^{-1} x = \frac{1}{2}\ln\left(\frac{1+x}{1-x}\right) \quad (|x| < 1)$

Trigonometry

In the triangle ABC: $a^2 = b^2 + c^2 - 2bc \cos A$

Trigonometric Identities

$\sin(A \pm B) = \sin A \cos B \pm \cos A \sin B$

$\cos(A \pm B) = \cos A \cos B \mp \sin A \sin B$

$\tan(A \pm B) = \dfrac{\tan A \pm \tan B}{1 \mp \tan A \tan B} \quad (A \pm B \neq (k + \frac{1}{2})\pi)$

Small angle approximations

$\sin\theta \approx \theta$

$\cos\theta \approx 1 - \dfrac{\theta^2}{2}$

$\tan\theta \approx \theta$

where θ is measured in radians.

Vectors

Vector product: $\mathbf{a}\times\mathbf{b} = |\mathbf{a}||\mathbf{b}|\sin\theta\hat{\mathbf{n}} = \begin{vmatrix} \mathbf{i} & a_1 & b_1 \\ \mathbf{j} & a_2 & b_2 \\ \mathbf{k} & a_3 & b_3 \end{vmatrix} = \begin{pmatrix} a_2b_3 - a_3b_2 \\ a_3b_1 - a_1b_3 \\ a_1b_2 - a_2b_1 \end{pmatrix}$

$$\mathbf{a}.(\mathbf{b}\times\mathbf{c}) = \begin{vmatrix} a_1 & b_1 & c_1 \\ a_2 & b_2 & c_2 \\ a_3 & b_3 & c_3 \end{vmatrix} = \mathbf{b}.(\mathbf{c}\times\mathbf{a}) = \mathbf{c}.(\mathbf{a}\times\mathbf{b})$$

If A is the point with position vector **a** = $a_1\mathbf{i} + a_2\mathbf{j} + a_3\mathbf{k}$ and the direction vector **b** is given by **b** = $b_1\mathbf{i} + b_2\mathbf{j} + b_3\mathbf{k}$, then the straight line through A with direction vector **b** has cartesian equation

$\dfrac{x-a_1}{b_1} = \dfrac{y-a_2}{b_2} = \dfrac{z-a_3}{b_3}$ (= λ)

The plane through A with normal vector **n** = $n_1\mathbf{i} + n_2\mathbf{j} + n_3\mathbf{k}$ has cartesian equation $n_1x + n_2y + n_3z + d = 0$ where $d = -$ **a.n**

The plane through non-collinear points *A*, *B* and *C* has vector equation
r = **a** + λ(**b** – **a**) + μ(**c** – **a**) = (1 - λ - μ)**a** + λ**b** + μ**c**

The plane through the point with position vector **a** and parallel to vectors **b** and **c** has equation
r = **a** + *s***b** + *t***c**

The perpendicular distance of (α, β, γ) from $n_1x + n_2y + n_3z + d = 0$ is $\dfrac{|n_1\alpha + n_2\beta + n_3\gamma + d|}{\sqrt{n_1^2 + n_2^2 + n_3^2}}$

Matrix transformations

Anticlockwise rotation through θ about the origin: $\begin{pmatrix} \cos\theta & -\sin\theta \\ \sin\theta & \cos\theta \end{pmatrix}$

Reflection in the line $y = (\tan\theta)\,x$: $\begin{pmatrix} \cos 2\theta & \sin 2\theta \\ \sin 2\theta & -\cos 2\theta \end{pmatrix}$

Differentiation

$f(x)$	$f'(x)$
$\tan kx$	$k \sec^2 kx$
$\dfrac{f(x)}{g(x)}$	$\dfrac{f'(x)g(x) - f(x)g'(x)}{(g(x))^2}$
$\sin^{-1} x$	$\dfrac{1}{\sqrt{1-x^2}}$
$\cos^{-1} x$	$-\dfrac{1}{\sqrt{1-x^2}}$
$\tan^{-1} x$	$\dfrac{1}{1+x^2}$
$\sec x$	$\sec x \tan x$
$\cot x$	$-\operatorname{cosec}^2 x$
$\operatorname{cosec} x$	$-\operatorname{cosec} x \cot x$
$\sinh x$	$\cosh x$
$\cosh x$	$\sinh x$
$\tanh x$	$\operatorname{sech}^2 x$
$\sinh^{-1} x$	$\dfrac{1}{\sqrt{1+x^2}}$
$\cosh^{-1} x$	$\dfrac{1}{\sqrt{x^2-1}}$
$\tanh^{-1} x$	$\dfrac{1}{1-x^2}$

Integration

(+ constant; a > 0 where relevant)

$f(x)$	$\int f(x)\,dx$
$\tan x$	$\ln\lvert\sec x\rvert$
$\cot x$	$\ln\lvert\sin x\rvert$
$\operatorname{cosec} x$	$-\ln\lvert\operatorname{cosec} x + \cot x\rvert = \ln\left\lvert\tan\left(\frac{x}{2}\right)\right\rvert$
$\sec x$	$\ln\lvert\sec x + \tan x\rvert = \ln\left\lvert\tan\left(\frac{x}{2}+\frac{\pi}{4}\right)\right\rvert$
$\sec^2 kx$	$\frac{1}{k}\tan kx$
$\sinh x$	$\cosh x$
$\cosh x$	$\sinh x$
$\tanh x$	$\ln\lvert\cosh x\rvert$
$\frac{1}{\sqrt{a^2-x^2}}$	$\sin^{-1}\left(\frac{x}{a}\right)$, $(\lvert x\rvert < a)$
$\frac{1}{a^2+x^2}$	$\frac{1}{a}\tan^{-1}\left(\frac{x}{a}\right)$
$\frac{1}{\sqrt{x^2-a^2}}$	$\cosh^{-1}\left(\frac{x}{a}\right)$ or $\ln\left(x+\sqrt{x^2-a^2}\right)$, $(x > a)$
$\frac{1}{\sqrt{a^2+x^2}}$	$\sinh^{-1}\left(\frac{x}{a}\right)$ or $\ln\left(x+\sqrt{x^2+a^2}\right)$
$\frac{1}{a^2-x^2}$	$\frac{1}{2a}\ln\left\lvert\frac{a+x}{a-x}\right\rvert = \frac{1}{a}\tanh^{-1}\left(\frac{x}{a}\right)$, $(\lvert x\rvert < a)$
$\frac{1}{x^2-a^2}$	$\frac{1}{2a}\ln\left\lvert\frac{x-a}{x+a}\right\rvert$, $(\lvert x\rvert > a)$

$$\int u\frac{dv}{dx}\,dx = uv - \int v\frac{du}{dx}\,dx$$

Area of a Sector

$A = \frac{1}{2}\int r^2\,d\theta$ (polar coordinates)

NUMERICAL MATHEMATICS

Numerical integration

The trapezium rule: $\int_a^b y\,\mathrm{d}x \approx \frac{1}{2}h\{(y_0 + y_n) + 2(y_1 + y_2 + \ldots + y_{n-1})\}$, where $h = \frac{b-a}{n}$

Numerical Solution of Equations

The Newton-Raphson iteration for solving $\mathrm{f}(x) = 0$: $x_{n+1} = x_n - \frac{\mathrm{f}(x_n)}{\mathrm{f}'(x_n)}$

MECHANICS

Motion in a circle

Transverse velocity: $v = r\dot{\theta}$

Transverse acceleration: $\dot{v} = r\ddot{\theta}$

Radial acceleration: $-r\dot{\theta}^2 = -\frac{v^2}{r}$

Centres of Mass

For uniform bodies

Triangular lamina: $\frac{2}{3}$ along median from vertex

Solid hemisphere, radius r : $\frac{3}{8}r$ from centre

Hemispherical shell, radius r : $\frac{1}{2}r$ from centre

Circular arc, radius r, angle at centre 2α: $\frac{r\sin\alpha}{\alpha}$ from centre

Sector of circle, radius r, angle at centre 2α: $\frac{2r\sin\alpha}{3\alpha}$ from centre

Solid cone or pyramid of height h: $\frac{1}{4}h$ above the base on the line from centre of base to vertex

Conical shell of height h: $\frac{1}{3}h$ above the base on the line from centre of base to vertex

Universal law of gravitation

Force = $\frac{Gm_1m_2}{d^2}$

PROBABILITY AND STATISTICS

Probability

$P(A \cup B) = P(A) + P(B) - P(A \cap B)$

$P(A \cap B) = P(A)P(B|A)$

$$P(A|B) = \frac{P(B \mid A)P(A)}{P(B \mid A)P(A) + P(B \mid A')P(A')}$$

Discrete distributions

For a discrete random variable X taking values x_i with probabilities p_i

Expectation (mean): $E(X) = \mu = \sum_i x_i p_i$

Variance: $\mathrm{Var}(X) = \sigma^2 = \Sigma_i (x_i - \mu)^2 p_i = \sum_i x_i^2 p_i - \mu^2$

For a function $g(X)$: $E(g(X)) = \sum_i g(x_i) p_i$

Standard discrete distributions:

Distribution of X	$P(X = x)$	Mean	Variance
Binomial $B(n, p)$	$\binom{n}{x} p^x (1-p)^{n-x}$	np	$np(1-p)$
Poisson $Po(\lambda)$	$e^{-\lambda} \frac{\lambda^x}{x!}$	λ	λ

Continuous distributions

For a continuous random variable X having probability density function $f(x)$:

Expectation (mean): $E(X) = \mu = \int x\, f(x) dx$

Variance: $\mathrm{Var}(X) = \sigma^2 = \int (x - \mu)^2 f(x) dx = \int x^2 f(x) dx - \mu^2$

For a function $g(X)$: $E(g(X)) = \int g(x) f(x) dx$

Standard continuous distributions

Distribution of X	P.D.F.	Mean	Variance
Uniform (Rectangular) on $[a, b]$	$\frac{1}{b-a}$	$\frac{1}{2}(a+b)$	$\frac{1}{12}(b-a)^2$
Normal N(μ, σ^2)	$\frac{1}{\sigma\sqrt{2\pi}}e^{-\frac{1}{2}\left(\frac{x-\mu}{\sigma}\right)^2}$	μ	σ^2

Expectation algebra

For independent random variables X and Y

$\mathrm{E}(XY) = \mathrm{E}(X)\mathrm{E}(Y)$; $\mathrm{Var}(aX \pm bY) = a^2\,\mathrm{Var}(X) + b^2\,\mathrm{Var}(Y)$

Sampling distributions

For a random sample $x_1, x_2, \ldots, x_n$ of n independent observations from a distribution having mean μ and variance σ^2

$\bar{x}$ is an unbiased estimator of μ, with $\mathrm{Var}(\bar{x}) = \frac{\sigma^2}{n}$

S^2 is an unbiased estimator of σ^2, where $S^2 = \frac{\Sigma(x_i - \bar{x})^2}{n-1}$

If X is the observed number of successes in n independent Bernoulli trials in each of which the probability of success is p, and $Y = \frac{x}{n}$, then

$\mathrm{E}(Y) = p$ and $\mathrm{Var}(Y) = \frac{p(1-p)}{n}$

For a random sample of n_x observations from N(μ_x, σ_x^2) and, independently, a random sample of n_y observations from N(μ_y, σ_y^2)

$$\frac{(\bar{X} - \bar{Y}) - (\mu_x - \mu_y)}{\sqrt{\frac{\sigma_x^2}{n_x} + \frac{\sigma_y^2}{n_y}}} \sim \mathrm{N}(0,1)$$

If $\sigma_x^2 = \sigma_y^2 = \sigma^2$ (unknown) then

$$\frac{(\bar{X} - \bar{Y}) - (\mu_x - \mu_y)}{\sqrt{S_\mathrm{p}^2\left(\frac{1}{n_x} + \frac{1}{n_y}\right)}} \sim t_{n_x + n_y - 2} \text{ where } S_\mathrm{p}^2 = \frac{(n_x - 1)S_x^2 + (n_y - 1)S_y^2}{n_x + n_y - 2}$$

Correlation and regression

For a set of n pairs of values (x_i, y_i)

$$S_{xx} = \Sigma(x_i - \bar{x})^2 = \Sigma x_i^2 - \frac{(\Sigma x_i)^2}{n}$$

$$S_{yy} = \Sigma(y_i - \bar{y})^2 = \Sigma y_i^2 - \frac{(\Sigma y_i)^2}{n}$$

$$S_{xy} = \Sigma(x_i - \bar{x})(y_i - \bar{y}) = \Sigma x_i y_i - \frac{(\Sigma x_i)(\Sigma y_i)}{n}$$

The product moment correlation coefficient is

$$r = \frac{S_{xy}}{\sqrt{S_{xx} S_{yy}}} = \frac{\Sigma(x_i - \bar{x})(y_i - \bar{y})}{\sqrt{\{\Sigma(x_i - \bar{x})^2\}\{\Sigma(y_i - \bar{y})^2\}}} = \frac{\Sigma x_i y_i - \frac{(\Sigma x_i)(\Sigma y_i)}{n}}{\sqrt{\left(\Sigma x_i^2 - \frac{(\Sigma x_i)^2}{n}\right)\left(\Sigma y_i^2 - \frac{(\Sigma y_i)^2}{n}\right)}}$$

The regression coefficient of y on x is $b = \frac{S_{xy}}{S_{xx}} = \frac{\Sigma(x_i - \bar{x})(y_i - \bar{y})}{\Sigma(x_i - \bar{x})^2}$

Least squares regression line of y on x is $y = a + bx$ where $a = \bar{y} - b\bar{x}$

Non-parametric tests

Goodness-of-fit test and contingency tables:

$$\sum \frac{(\mathrm{O}_i - \mathrm{E}_i)^2}{\mathrm{E}_i} \sim \chi_\nu^2$$

NORMAL PROBABILITY TABLE

Table of $\Phi(z)$

z	0.00	0.01	0.02	0.03	0.04	0.05	0.06	0.07	0.08	0.09	(ADD) 1	2	3	4	5	6	7	8	9
0.0	0.5000	0.5040	0.5080	0.5120	0.5160	0.5199	0.5239	0.5279	0.5319	0.5359	4	8	12	16	20	24	28	32	36
0.1	0.5398	0.5438	0.5478	0.5517	0.5557	0.5596	0.5636	0.5675	0.5714	0.5753	4	8	12	16	20	24	28	32	36
0.2	0.5793	0.5832	0.5871	0.5910	0.5948	0.5987	0.6026	0.6064	0.6103	0.6141	4	8	12	15	19	23	27	31	35
0.3	0.6179	0.6217	0.6255	0.6293	0.6331	0.6368	0.6406	0.6443	0.6480	0.6517	4	8	11	15	19	23	26	30	34
0.4	0.6554	0.6591	0.6628	0.6664	0.6700	0.6736	0.6772	0.6808	0.6844	0.6879	4	7	11	14	18	22	25	29	32
0.5	0.6915	0.6950	0.6985	0.7019	0.7054	0.7088	0.7123	0.7157	0.7190	0.7224	3	7	10	14	17	21	24	27	31
0.6	0.7257	0.7291	0.7324	0.7357	0.7389	0.7422	0.7454	0.7486	0.7517	0.7549	3	6	10	13	16	19	23	26	29
0.7	0.7580	0.7611	0.7642	0.7673	0.7704	0.7734	0.7764	0.7794	0.7823	0.7852	3	6	9	12	15	18	21	24	27
0.8	0.7881	0.7910	0.7939	0.7967	0.7995	0.8023	0.8051	0.8078	0.8106	0.8133	3	6	8	11	14	17	19	22	25
0.9	0.8159	0.8186	0.8212	0.8238	0.8264	0.8289	0.8315	0.8340	0.8365	0.8389	3	5	8	10	13	15	18	20	23
1.0	0.8413	0.8438	0.8461	0.8485	0.8508	0.8531	0.8554	0.8577	0.8599	0.8621	2	5	7	9	12	14	16	18	21
1.1	0.8643	0.8665	0.8686	0.8708	0.8729	0.8749	0.8770	0.8790	0.8810	0.8830	2	4	6	8	10	12	14	16	19
1.2	0.8849	0.8869	0.8888	0.8907	0.8925	0.8944	0.8962	0.8980	0.8997	0.9015	2	4	6	7	9	11	13	15	16
1.3	0.9032	0.9049	0.9066	0.9082	0.9099	0.9115	0.9131	0.9147	0.9162	0.9177	2	3	5	6	8	10	11	13	14
1.4	0.9192	0.9207	0.9222	0.9236	0.9251	0.9265	0.9279	0.9292	0.9306	0.9319	1	3	4	6	7	8	10	11	13
1.5	0.9332	0.9345	0.9357	0.9370	0.9382	0.9394	0.9406	0.9418	0.9429	0.9441	1	2	4	5	6	7	8	10	11
1.6	0.9452	0.9463	0.9474	0.9484	0.9495	0.9505	0.9515	0.9525	0.9535	0.9545	1	2	3	4	5	6	7	8	9
1.7	0.9554	0.9564	0.9573	0.9582	0.9591	0.9599	0.9608	0.9616	0.9625	0.9633	1	2	3	3	4	5	6	7	8
1.8	0.9641	0.9649	0.9656	0.9664	0.9671	0.9678	0.9686	0.9693	0.9699	0.9706	1	1	2	3	4	4	5	6	6
1.9	0.9713	0.9719	0.9726	0.9732	0.9738	0.9744	0.9750	0.9756	0.9761	0.9767	1	1	2	2	3	4	4	5	5
2.0	0.9772	0.9778	0.9783	0.9788	0.9793	0.9798	0.9803	0.9808	0.9812	0.9817	0	1	1	2	2	3	3	4	4
2.1	0.9821	0.9826	0.9830	0.9834	0.9838	0.9842	0.9846	0.9850	0.9854	0.9857	0	1	1	2	2	2	3	3	4
2.2	0.9861	0.9864	0.9868	0.9871	0.9875	0.9878	0.9881	0.9884	0.9887	0.9890	0	1	1	1	2	2	2	3	3
2.3	0.9893	0.9896	0.9898	0.9901	0.9904	0.9906	0.9909	0.9911	0.9913	0.9916	0	1	1	1	1	2	2	2	2
2.4	0.9918	0.9920	0.9922	0.9925	0.9927	0.9929	0.9931	0.9932	0.9934	0.9936	0	0	1	1	1	1	1	2	2
2.5	0.9938	0.9940	0.9941	0.9943	0.9945	0.9946	0.9948	0.9949	0.9951	0.9952	0	0	0	1	1	1	1	1	1
2.6	0.9953	0.9955	0.9956	0.9957	0.9959	0.9960	0.9961	0.9962	0.9963	0.9964	0	0	0	0	1	1	1	1	1
2.7	0.9965	0.9966	0.9967	0.9968	0.9969	0.9970	0.9971	0.9972	0.9973	0.9974	0	0	0	0	0	1	1	1	1
2.8	0.9974	0.9975	0.9976	0.9977	0.9977	0.9978	0.9979	0.9979	0.9980	0.9981	0	0	0	0	0	0	0	1	1
2.9	0.9981	0.9982	0.9982	0.9983	0.9984	0.9984	0.9985	0.9985	0.9986	0.9986	0	0	0	0	0	0	0	0	0
3.0	0.9987	0.9987	0.9987	0.9988	0.9988	0.9989	0.9989	0.9989	0.9990	0.9990	0	0	0	0	0	0	0	0	0

The function tabulated is $\Phi(z) = \int_{-\infty}^{z} \frac{1}{\sqrt{2\pi}} e^{-\frac{1}{2}t^2}\, \mathrm{d}t$. $\Phi(z)$ is the probability that a random variable having a Normal frequency density, with mean zero and variance unity, will be less than z.

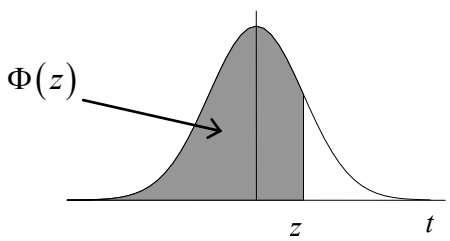

BINOMIAL CUMULATIVE DISTRIBUTION FUNCTION

The tabulated value is $P(X \le x)$, where X has a binomial distribution with index n and parameter p.

$p =$	0.05	0.10	0.15	0.20	0.25	0.30	0.35	0.40	0.45	0.50
$n = 5, x = 0$	0.7738	0.5905	0.4437	0.3277	0.2373	0.1681	0.1160	0.0778	0.0503	0.0313
1	0.9774	0.9185	0.8352	0.7373	0.6328	0.5282	0.4284	0.3370	0.2562	0.1875
2	0.9988	0.9914	0.9734	0.9421	0.8965	0.8369	0.7648	0.6826	0.5931	0.5000
3	1.0000	0.9995	0.9978	0.9933	0.9844	0.9692	0.9460	0.9130	0.8688	0.8125
4	1.0000	1.0000	0.9999	0.9997	0.9990	0.9976	0.9947	0.9898	0.9815	0.9688
$n = 6, x = 0$	0.7351	0.5314	0.3771	0.2621	0.1780	0.1176	0.0754	0.0467	0.0277	0.0156
1	0.9672	0.8857	0.7765	0.6554	0.5339	0.4202	0.3191	0.2333	0.1636	0.1094
2	0.9978	0.9842	0.9527	0.9011	0.8306	0.7443	0.6471	0.5443	0.4415	0.3438
3	0.9999	0.9987	0.9941	0.9830	0.9624	0.9295	0.8826	0.8208	0.7447	0.6563
4	1.0000	0.9999	0.9996	0.9984	0.9954	0.9891	0.9777	0.9590	0.9308	0.8906
5	1.0000	1.0000	1.0000	0.9999	0.9998	0.9993	0.9982	0.9959	0.9917	0.9844
$n = 7, x = 0$	0.6983	0.4783	0.3206	0.2097	0.1335	0.0824	0.0490	0.0280	0.0152	0.0078
1	0.9556	0.8503	0.7166	0.5767	0.4449	0.3294	0.2338	0.1586	0.1024	0.0625
2	0.9962	0.9743	0.9262	0.8520	0.7564	0.6471	0.5323	0.4199	0.3164	0.2266
3	0.9998	0.9973	0.9879	0.9667	0.9294	0.8740	0.8002	0.7102	0.6083	0.5000
4	1.0000	0.9998	0.9988	0.9953	0.9871	0.9712	0.9444	0.9037	0.8471	0.7734
5	1.0000	1.0000	0.9999	0.9996	0.9987	0.9962	0.9910	0.9812	0.9643	0.9375
6	1.0000	1.0000	1.0000	1.0000	0.9999	0.9998	0.9994	0.9984	0.9963	0.9922
$n = 8, x = 0$	0.6634	0.4305	0.2725	0.1678	0.1001	0.0576	0.0319	0.0168	0.0084	0.0039
1	0.9428	0.8131	0.6572	0.5033	0.3671	0.2553	0.1691	0.1064	0.0632	0.0352
2	0.9942	0.9619	0.8948	0.7969	0.6785	0.5518	0.4278	0.3154	0.2201	0.1445
3	0.9996	0.9950	0.9786	0.9437	0.8862	0.8059	0.7064	0.5941	0.4770	0.3633
4	1.0000	0.9996	0.9971	0.9896	0.9727	0.9420	0.8939	0.8263	0.7396	0.6367
5	1.0000	1.0000	0.9998	0.9988	0.9958	0.9887	0.9747	0.9502	0.9115	0.8555
6	1.0000	1.0000	1.0000	0.9999	0.9996	0.9987	0.9964	0.9915	0.9819	0.9648
7	1.0000	1.0000	1.0000	1.0000	1.0000	0.9999	0.9998	0.9993	0.9983	0.9961
$n = 9, x = 0$	0.6302	0.3874	0.2316	0.1342	0.0751	0.0404	0.0207	0.0101	0.0046	0.0020
1	0.9288	0.7748	0.5995	0.4362	0.3003	0.1960	0.1211	0.0705	0.0385	0.0195
2	0.9916	0.9470	0.8591	0.7382	0.6007	0.4628	0.3373	0.2318	0.1495	0.0898
3	0.9994	0.9917	0.9661	0.9144	0.8343	0.7297	0.6089	0.4826	0.3614	0.2539
4	1.0000	0.9991	0.9944	0.9804	0.9511	0.9012	0.8283	0.7334	0.6214	0.5000
5	1.0000	0.9999	0.9994	0.9969	0.9900	0.9747	0.9464	0.9006	0.8342	0.7461
6	1.0000	1.0000	1.0000	0.9997	0.9987	0.9957	0.9888	0.9750	0.9502	0.9102
7	1.0000	1.0000	1.0000	1.0000	0.9999	0.9996	0.9986	0.9962	0.9909	0.9805
8	1.0000	1.0000	1.0000	1.0000	1.0000	1.0000	0.9999	0.9997	0.9992	0.9980
$n = 10, x = 0$	0.5987	0.3487	0.1969	0.1074	0.0563	0.0282	0.0135	0.0060	0.0025	0.0010
1	0.9139	0.7361	0.5443	0.3758	0.2440	0.1493	0.0860	0.0464	0.0233	0.0107
2	0.9885	0.9298	0.8202	0.6778	0.5256	0.3828	0.2616	0.1673	0.0996	0.0547
3	0.9990	0.9872	0.9500	0.8791	0.7759	0.6496	0.5138	0.3823	0.2660	0.1719
4	0.9999	0.9984	0.9901	0.9672	0.9219	0.8497	0.7515	0.6331	0.5044	0.3770
5	1.0000	0.9999	0.9986	0.9936	0.9803	0.9527	0.9051	0.8338	0.7384	0.6230
6	1.0000	1.0000	0.9999	0.9991	0.9965	0.9894	0.9740	0.9452	0.8980	0.8281
7	1.0000	1.0000	1.0000	0.9999	0.9996	0.9984	0.9952	0.9877	0.9726	0.9453
8	1.0000	1.0000	1.0000	1.0000	1.0000	0.9999	0.9995	0.9983	0.9955	0.9893
9	1.0000	1.0000	1.0000	1.0000	1.0000	1.0000	1.0000	0.9999	0.9997	0.9990

$p =$	0.05	0.10	0.15	0.20	0.25	0.30	0.35	0.40	0.45	0.50
$n = 12, x = 0$	0.5404	0.2824	0.1422	0.0687	0.0317	0.0138	0.0057	0.0022	0.0008	0.0002
1	0.8816	0.6590	0.4435	0.2749	0.1584	0.0850	0.0424	0.0196	0.0083	0.0032
2	0.9804	0.8891	0.7358	0.5583	0.3907	0.2528	0.1513	0.0834	0.0421	0.0193
3	0.9978	0.9744	0.9078	0.7946	0.6488	0.4925	0.3467	0.2253	0.1345	0.0730
4	0.9998	0.9957	0.9761	0.9274	0.8424	0.7237	0.5833	0.4382	0.3044	0.1938
5	1.0000	0.9995	0.9954	0.9806	0.9456	0.8822	0.7873	0.6652	0.5269	0.3872
6	1.0000	0.9999	0.9993	0.9961	0.9857	0.9614	0.9154	0.8418	0.7393	0.6128
7	1.0000	1.0000	0.9999	0.9994	0.9972	0.9905	0.9745	0.9427	0.8883	0.8062
8	1.0000	1.0000	1.0000	0.9999	0.9996	0.9983	0.9944	0.9847	0.9644	0.9270
9	1.0000	1.0000	1.0000	1.0000	1.0000	0.9998	0.9992	0.9972	0.9921	0.9807
10	1.0000	1.0000	1.0000	1.0000	1.0000	1.0000	0.9999	0.9997	0.9989	0.9968
11	1.0000	1.0000	1.0000	1.0000	1.0000	1.0000	1.0000	1.0000	0.9999	0.9998
$n = 15, x = 0$	0.4633	0.2059	0.0874	0.0352	0.0134	0.0047	0.0016	0.0005	0.0001	0.0000
1	0.8290	0.5490	0.3186	0.1671	0.0802	0.0353	0.0142	0.0052	0.0017	0.0005
2	0.9638	0.8159	0.6042	0.3980	0.2361	0.1268	0.0617	0.0271	0.0107	0.0037
3	0.9945	0.9444	0.8227	0.6482	0.4613	0.2969	0.1727	0.0905	0.0424	0.0176
4	0.9994	0.9873	0.9383	0.8358	0.6865	0.5155	0.3519	0.2173	0.1204	0.0592
5	0.9999	0.9978	0.9832	0.9389	0.8516	0.7216	0.5643	0.4032	0.2608	0.1509
6	1.0000	0.9997	0.9964	0.9819	0.9434	0.8689	0.7548	0.6098	0.4522	0.3036
7	1.0000	1.0000	0.9994	0.9958	0.9827	0.9500	0.8868	0.7869	0.6535	0.5000
8	1.0000	1.0000	0.9999	0.9992	0.9958	0.9848	0.9578	0.9050	0.8182	0.6964
9	1.0000	1.0000	1.0000	0.9999	0.9992	0.9963	0.9876	0.9662	0.9231	0.8491
10	1.0000	1.0000	1.0000	1.0000	0.9999	0.9993	0.9972	0.9907	0.9745	0.9408
11	1.0000	1.0000	1.0000	1.0000	1.0000	0.9999	0.9995	0.9981	0.9937	0.9824
12	1.0000	1.0000	1.0000	1.0000	1.0000	1.0000	0.9999	0.9997	0.9989	0.9963
13	1.0000	1.0000	1.0000	1.0000	1.0000	1.0000	1.0000	1.0000	0.9999	0.9995
14	1.0000	1.0000	1.0000	1.0000	1.0000	1.0000	1.0000	1.0000	1.0000	1.0000
$n = 20, x = 0$	0.3585	0.1216	0.0388	0.0115	0.0032	0.0008	0.0002	0.0000	0.0000	0.0000
1	0.7358	0.3917	0.1756	0.0692	0.0243	0.0076	0.0021	0.0005	0.0001	0.0000
2	0.9245	0.6769	0.4049	0.2061	0.0913	0.0355	0.0121	0.0036	0.0009	0.0002
3	0.9841	0.8670	0.6477	0.4114	0.2252	0.1071	0.0444	0.0160	0.0049	0.0013
4	0.9974	0.9568	0.8298	0.6296	0.4148	0.2375	0.1182	0.0510	0.0189	0.0059
5	0.9997	0.9887	0.9327	0.8042	0.6172	0.4164	0.2454	0.1256	0.0553	0.0207
6	1.0000	0.9976	0.9781	0.9133	0.7858	0.6080	0.4166	0.2500	0.1299	0.0577
7	1.0000	0.9996	0.9941	0.9679	0.8982	0.7723	0.6010	0.4159	0.2520	0.1316
8	1.0000	0.9999	0.9987	0.9900	0.9591	0.8867	0.7624	0.5956	0.4143	0.2517
9	1.0000	1.0000	0.9998	0.9974	0.9861	0.9520	0.8782	0.7553	0.5914	0.4119
10	1.0000	1.0000	1.0000	0.9994	0.9961	0.9829	0.9468	0.8725	0.7507	0.5881
11	1.0000	1.0000	1.0000	0.9999	0.9991	0.9949	0.9804	0.9435	0.8692	0.7483
12	1.0000	1.0000	1.0000	1.0000	0.9998	0.9987	0.9940	0.9790	0.9420	0.8684
13	1.0000	1.0000	1.0000	1.0000	1.0000	0.9997	0.9985	0.9935	0.9786	0.9423
14	1.0000	1.0000	1.0000	1.0000	1.0000	1.0000	0.9997	0.9984	0.9936	0.9793
15	1.0000	1.0000	1.0000	1.0000	1.0000	1.0000	1.0000	0.9997	0.9985	0.9941
16	1.0000	1.0000	1.0000	1.0000	1.0000	1.0000	1.0000	1.0000	0.9997	0.9987
17	1.0000	1.0000	1.0000	1.0000	1.0000	1.0000	1.0000	1.0000	1.0000	0.9998
18	1.0000	1.0000	1.0000	1.0000	1.0000	1.0000	1.0000	1.0000	1.0000	1.0000

$p =$	0.05	0.10	0.15	0.20	0.25	0.30	0.35	0.40	0.45	0.50
$n = 25, x = 0$	0.2774	0.0718	0.0172	0.0038	0.0008	0.0001	0.0000	0.0000	0.0000	0.0000
1	0.6424	0.2712	0.0931	0.0274	0.0070	0.0016	0.0003	0.0001	0.0000	0.0000
2	0.8729	0.5371	0.2537	0.0982	0.0321	0.0090	0.0021	0.0004	0.0001	0.0000
3	0.9659	0.7636	0.4711	0.2340	0.0962	0.0332	0.0097	0.0024	0.0005	0.0001
4	0.9928	0.9020	0.6821	0.4207	0.2137	0.0905	0.0320	0.0095	0.0023	0.0005
5	0.9988	0.9666	0.8385	0.6167	0.3783	0.1935	0.0826	0.0294	0.0086	0.0020
6	0.9998	0.9905	0.9305	0.7800	0.5611	0.3407	0.1734	0.0736	0.0258	0.0073
7	1.0000	0.9977	0.9745	0.8909	0.7265	0.5118	0.3061	0.1536	0.0639	0.0216
8	1.0000	0.9995	0.9920	0.9532	0.8506	0.6769	0.4668	0.2735	0.1340	0.0539
9	1.0000	0.9999	0.9979	0.9827	0.9287	0.8106	0.6303	0.4246	0.2424	0.1148
10	1.0000	1.0000	0.9995	0.9944	0.9703	0.9022	0.7712	0.5858	0.3843	0.2122
11	1.0000	1.0000	0.9999	0.9985	0.9893	0.9558	0.8746	0.7323	0.5426	0.3450
12	1.0000	1.0000	1.0000	0.9996	0.9966	0.9825	0.9396	0.8462	0.6937	0.5000
13	1.0000	1.0000	1.0000	0.9999	0.9991	0.9940	0.9745	0.9222	0.8173	0.6550
14	1.0000	1.0000	1.0000	1.0000	0.9998	0.9982	0.9907	0.9656	0.9040	0.7878
15	1.0000	1.0000	1.0000	1.0000	1.0000	0.9995	0.9971	0.9868	0.9560	0.8852
16	1.0000	1.0000	1.0000	1.0000	1.0000	0.9999	0.9992	0.9957	0.9826	0.9461
17	1.0000	1.0000	1.0000	1.0000	1.0000	1.0000	0.9998	0.9988	0.9942	0.9784
18	1.0000	1.0000	1.0000	1.0000	1.0000	1.0000	1.0000	0.9997	0.9984	0.9927
19	1.0000	1.0000	1.0000	1.0000	1.0000	1.0000	1.0000	0.9999	0.9996	0.9980
20	1.0000	1.0000	1.0000	1.0000	1.0000	1.0000	1.0000	1.0000	0.9999	0.9995
21	1.0000	1.0000	1.0000	1.0000	1.0000	1.0000	1.0000	1.0000	1.0000	0.9999
22	1.0000	1.0000	1.0000	1.0000	1.0000	1.0000	1.0000	1.0000	1.0000	1.0000
$n = 30, x = 0$	0.2146	0.0424	0.0076	0.0012	0.0002	0.0000	0.0000	0.0000	0.0000	0.0000
1	0.5535	0.1837	0.0480	0.0105	0.0020	0.0003	0.0000	0.0000	0.0000	0.0000
2	0.8122	0.4114	0.1514	0.0442	0.0106	0.0021	0.0003	0.0000	0.0000	0.0000
3	0.9392	0.6474	0.3217	0.1227	0.0374	0.0093	0.0019	0.0003	0.0000	0.0000
4	0.9844	0.8245	0.5245	0.2552	0.0979	0.0302	0.0075	0.0015	0.0002	0.0000
5	0.9967	0.9268	0.7106	0.4275	0.2026	0.0766	0.0233	0.0057	0.0011	0.0002
6	0.9994	0.9742	0.8474	0.6070	0.3481	0.1595	0.0586	0.0172	0.0040	0.0007
7	0.9999	0.9922	0.9302	0.7608	0.5143	0.2814	0.1238	0.0435	0.0121	0.0026
8	1.0000	0.9980	0.9722	0.8713	0.6736	0.4315	0.2247	0.0940	0.0312	0.0081
9	1.0000	0.9995	0.9903	0.9389	0.8034	0.5888	0.3575	0.1763	0.0694	0.0214
10	1.0000	0.9999	0.9971	0.9744	0.8943	0.7304	0.5078	0.2915	0.1350	0.0494
11	1.0000	1.0000	0.9992	0.9905	0.9493	0.8407	0.6548	0.4311	0.2327	0.1002
12	1.0000	1.0000	0.9998	0.9969	0.9784	0.9155	0.7802	0.5785	0.3592	0.1808
13	1.0000	1.0000	1.0000	0.9991	0.9918	0.9599	0.8737	0.7145	0.5025	0.2923
14	1.0000	1.0000	1.0000	0.9998	0.9973	0.9831	0.9348	0.8246	0.6448	0.4278
15	1.0000	1.0000	1.0000	0.9999	0.9992	0.9936	0.9699	0.9029	0.7691	0.5722
16	1.0000	1.0000	1.0000	1.0000	0.9998	0.9979	0.9876	0.9519	0.8644	0.7077
17	1.0000	1.0000	1.0000	1.0000	0.9999	0.9994	0.9955	0.9788	0.9286	0.8192
18	1.0000	1.0000	1.0000	1.0000	1.0000	0.9998	0.9986	0.9917	0.9666	0.8998
19	1.0000	1.0000	1.0000	1.0000	1.0000	1.0000	0.9996	0.9971	0.9862	0.9506
20	1.0000	1.0000	1.0000	1.0000	1.0000	1.0000	0.9999	0.9991	0.9950	0.9786
21	1.0000	1.0000	1.0000	1.0000	1.0000	1.0000	1.0000	0.9998	0.9984	0.9919
22	1.0000	1.0000	1.0000	1.0000	1.0000	1.0000	1.0000	1.0000	0.9996	0.9974
23	1.0000	1.0000	1.0000	1.0000	1.0000	1.0000	1.0000	1.0000	0.9999	0.9993
24	1.0000	1.0000	1.0000	1.0000	1.0000	1.0000	1.0000	1.0000	1.0000	0.9998
25	1.0000	1.0000	1.0000	1.0000	1.0000	1.0000	1.0000	1.0000	1.0000	1.0000

$p =$	0.05	0.10	0.15	0.20	0.25	0.30	0.35	0.40	0.45	0.50
$n = 40, x = 0$	0.1285	0.0148	0.0015	0.0001	0.0000	0.0000	0.0000	0.0000	0.0000	0.0000
1	0.3991	0.0805	0.0121	0.0015	0.0001	0.0000	0.0000	0.0000	0.0000	0.0000
2	0.6767	0.2228	0.0486	0.0079	0.0010	0.0001	0.0000	0.0000	0.0000	0.0000
3	0.8619	0.4231	0.1302	0.0285	0.0047	0.0006	0.0001	0.0000	0.0000	0.0000
4	0.9520	0.6290	0.2633	0.0759	0.0160	0.0026	0.0003	0.0000	0.0000	0.0000
5	0.9861	0.7937	0.4325	0.1613	0.0433	0.0086	0.0013	0.0001	0.0000	0.0000
6	0.9966	0.9005	0.6067	0.2859	0.0962	0.0238	0.0044	0.0006	0.0001	0.0000
7	0.9993	0.9581	0.7559	0.4371	0.1820	0.0553	0.0124	0.0021	0.0002	0.0000
8	0.9999	0.9845	0.8646	0.5931	0.2998	0.1110	0.0303	0.0061	0.0009	0.0001
9	1.0000	0.9949	0.9328	0.7318	0.4395	0.1959	0.0644	0.0156	0.0027	0.0003
10	1.0000	0.9985	0.9701	0.8392	0.5839	0.3087	0.1215	0.0352	0.0074	0.0011
11	1.0000	0.9996	0.9880	0.9125	0.7151	0.4406	0.2053	0.0709	0.0179	0.0032
12	1.0000	0.9999	0.9957	0.9568	0.8209	0.5772	0.3143	0.1285	0.0386	0.0083
13	1.0000	1.0000	0.9986	0.9806	0.8968	0.7032	0.4408	0.2112	0.0751	0.0192
14	1.0000	1.0000	0.9996	0.9921	0.9456	0.8074	0.5721	0.3174	0.1326	0.0403
15	1.0000	1.0000	0.9999	0.9971	0.9738	0.8849	0.6946	0.4402	0.2142	0.0769
16	1.0000	1.0000	1.0000	0.9990	0.9884	0.9367	0.7978	0.5681	0.3185	0.1341
17	1.0000	1.0000	1.0000	0.9997	0.9953	0.9680	0.8761	0.6885	0.4391	0.2148
18	1.0000	1.0000	1.0000	0.9999	0.9983	0.9852	0.9301	0.7911	0.5651	0.3179
19	1.0000	1.0000	1.0000	1.0000	0.9994	0.9937	0.9637	0.8702	0.6844	0.4373
20	1.0000	1.0000	1.0000	1.0000	0.9998	0.9976	0.9827	0.9256	0.7870	0.5627
21	1.0000	1.0000	1.0000	1.0000	1.0000	0.9991	0.9925	0.9608	0.8669	0.6821
22	1.0000	1.0000	1.0000	1.0000	1.0000	0.9997	0.9970	0.9811	0.9233	0.7852
23	1.0000	1.0000	1.0000	1.0000	1.0000	0.9999	0.9989	0.9917	0.9595	0.8659
24	1.0000	1.0000	1.0000	1.0000	1.0000	1.0000	0.9996	0.9966	0.9804	0.9231
25	1.0000	1.0000	1.0000	1.0000	1.0000	1.0000	0.9999	0.9988	0.9914	0.9597
26	1.0000	1.0000	1.0000	1.0000	1.0000	1.0000	1.0000	0.9996	0.9966	0.9808
27	1.0000	1.0000	1.0000	1.0000	1.0000	1.0000	1.0000	0.9999	0.9988	0.9917
28	1.0000	1.0000	1.0000	1.0000	1.0000	1.0000	1.0000	1.0000	0.9996	0.9968
29	1.0000	1.0000	1.0000	1.0000	1.0000	1.0000	1.0000	1.0000	0.9999	0.9989
30	1.0000	1.0000	1.0000	1.0000	1.0000	1.0000	1.0000	1.0000	1.0000	0.9997
31	1.0000	1.0000	1.0000	1.0000	1.0000	1.0000	1.0000	1.0000	1.0000	0.9999
32	1.0000	1.0000	1.0000	1.0000	1.0000	1.0000	1.0000	1.0000	1.0000	1.0000

$p =$	0.05	0.10	0.15	0.20	0.25	0.30	0.35	0.40	0.45	0.50
$n = 50, x = 0$	0.0769	0.0052	0.0003	0.0000	0.0000	0.0000	0.0000	0.0000	0.0000	0.0000
1	0.2794	0.0338	0.0029	0.0002	0.0000	0.0000	0.0000	0.0000	0.0000	0.0000
2	0.5405	0.1117	0.0142	0.0013	0.0001	0.0000	0.0000	0.0000	0.0000	0.0000
3	0.7604	0.2503	0.0460	0.0057	0.0005	0.0000	0.0000	0.0000	0.0000	0.0000
4	0.8964	0.4312	0.1121	0.0185	0.0021	0.0002	0.0000	0.0000	0.0000	0.0000
5	0.9622	0.6161	0.2194	0.0480	0.0070	0.0007	0.0001	0.0000	0.0000	0.0000
6	0.9882	0.7702	0.3613	0.1034	0.0194	0.0025	0.0002	0.0000	0.0000	0.0000
7	0.9968	0.8779	0.5188	0.1904	0.0453	0.0073	0.0008	0.0001	0.0000	0.0000
8	0.9992	0.9421	0.6681	0.3073	0.0916	0.0183	0.0025	0.0002	0.0000	0.0000
9	0.9998	0.9755	0.7911	0.4437	0.1637	0.0402	0.0067	0.0008	0.0001	0.0000
10	1.0000	0.9906	0.8801	0.5836	0.2622	0.0789	0.0160	0.0022	0.0002	0.0000
11	1.0000	0.9968	0.9372	0.7107	0.3816	0.1390	0.0342	0.0057	0.0006	0.0000
12	1.0000	0.9990	0.9699	0.8139	0.5110	0.2229	0.0661	0.0133	0.0018	0.0002
13	1.0000	0.9997	0.9868	0.8894	0.6370	0.3279	0.1163	0.0280	0.0045	0.0005
14	1.0000	0.9999	0.9947	0.9393	0.7481	0.4468	0.1878	0.0540	0.0104	0.0013
15	1.0000	1.0000	0.9981	0.9692	0.8369	0.5692	0.2801	0.0955	0.0220	0.0033
16	1.0000	1.0000	0.9993	0.9856	0.9017	0.6839	0.3889	0.1561	0.0427	0.0077
17	1.0000	1.0000	0.9998	0.9937	0.9449	0.7822	0.5060	0.2369	0.0765	0.0164
18	1.0000	1.0000	0.9999	0.9975	0.9713	0.8594	0.6216	0.3356	0.1273	0.0325
19	1.0000	1.0000	1.0000	0.9991	0.9861	0.9152	0.7264	0.4465	0.1974	0.0595
20	1.0000	1.0000	1.0000	0.9997	0.9937	0.9522	0.8139	0.5610	0.2862	0.1013
21	1.0000	1.0000	1.0000	0.9999	0.9974	0.9749	0.8813	0.6701	0.3900	0.1611
22	1.0000	1.0000	1.0000	1.0000	0.9990	0.9877	0.9290	0.7660	0.5019	0.2399
23	1.0000	1.0000	1.0000	1.0000	0.9996	0.9944	0.9604	0.8438	0.6134	0.3359
24	1.0000	1.0000	1.0000	1.0000	0.9999	0.9976	0.9793	0.9022	0.7160	0.4439
25	1.0000	1.0000	1.0000	1.0000	1.0000	0.9991	0.9900	0.9427	0.8034	0.5561
26	1.0000	1.0000	1.0000	1.0000	1.0000	0.9997	0.9955	0.9686	0.8721	0.6641
27	1.0000	1.0000	1.0000	1.0000	1.0000	0.9999	0.9981	0.9840	0.9220	0.7601
28	1.0000	1.0000	1.0000	1.0000	1.0000	1.0000	0.9993	0.9924	0.9556	0.8389
29	1.0000	1.0000	1.0000	1.0000	1.0000	1.0000	0.9997	0.9966	0.9765	0.8987
30	1.0000	1.0000	1.0000	1.0000	1.0000	1.0000	0.9999	0.9986	0.9884	0.9405
31	1.0000	1.0000	1.0000	1.0000	1.0000	1.0000	1.0000	0.9995	0.9947	0.9675
32	1.0000	1.0000	1.0000	1.0000	1.0000	1.0000	1.0000	0.9998	0.9978	0.9836
33	1.0000	1.0000	1.0000	1.0000	1.0000	1.0000	1.0000	0.9999	0.9991	0.9923
34	1.0000	1.0000	1.0000	1.0000	1.0000	1.0000	1.0000	1.0000	0.9997	0.9967
35	1.0000	1.0000	1.0000	1.0000	1.0000	1.0000	1.0000	1.0000	0.9999	0.9987
36	1.0000	1.0000	1.0000	1.0000	1.0000	1.0000	1.0000	1.0000	1.0000	0.9995
37	1.0000	1.0000	1.0000	1.0000	1.0000	1.0000	1.0000	1.0000	1.0000	0.9998
38	1.0000	1.0000	1.0000	1.0000	1.0000	1.0000	1.0000	1.0000	1.0000	1.0000

POISSON CUMULATIVE DISTRIBUTION FUNCTION

The tabulated value is $P(X \leq x)$, where X has a Poisson distribution with parameter λ.

$\lambda =$	0.5	1.0	1.5	2.0	2.5	3.0	3.5	4.0	4.5	5.0
$x = 0$	0.6065	0.3679	0.2231	0.1353	0.0821	0.0498	0.0302	0.0183	0.0111	0.0067
1	0.9098	0.7358	0.5578	0.4060	0.2873	0.1991	0.1359	0.0916	0.0611	0.0404
2	0.9856	0.9197	0.8088	0.6767	0.5438	0.4232	0.3208	0.2381	0.1736	0.1247
3	0.9982	0.9810	0.9344	0.8571	0.7576	0.6472	0.5366	0.4335	0.3423	0.2650
4	0.9998	0.9963	0.9814	0.9473	0.8912	0.8153	0.7254	0.6288	0.5321	0.4405
5	1.0000	0.9994	0.9955	0.9834	0.9580	0.9161	0.8576	0.7851	0.7029	0.6160
6	1.0000	0.9999	0.9991	0.9955	0.9858	0.9665	0.9347	0.8893	0.8311	0.7622
7	1.0000	1.0000	0.9998	0.9989	0.9958	0.9881	0.9733	0.9489	0.9134	0.8666
8	1.0000	1.0000	1.0000	0.9998	0.9989	0.9962	0.9901	0.9786	0.9597	0.9319
9	1.0000	1.0000	1.0000	1.0000	0.9997	0.9989	0.9967	0.9919	0.9829	0.9682
10	1.0000	1.0000	1.0000	1.0000	0.9999	0.9997	0.9990	0.9972	0.9933	0.9863
11	1.0000	1.0000	1.0000	1.0000	1.0000	0.9999	0.9997	0.9991	0.9976	0.9945
12	1.0000	1.0000	1.0000	1.0000	1.0000	1.0000	0.9999	0.9997	0.9992	0.9980
13	1.0000	1.0000	1.0000	1.0000	1.0000	1.0000	1.0000	0.9999	0.9997	0.9993
14	1.0000	1.0000	1.0000	1.0000	1.0000	1.0000	1.0000	1.0000	0.9999	0.9998
15	1.0000	1.0000	1.0000	1.0000	1.0000	1.0000	1.0000	1.0000	1.0000	0.9999
16	1.0000	1.0000	1.0000	1.0000	1.0000	1.0000	1.0000	1.0000	1.0000	1.0000
17	1.0000	1.0000	1.0000	1.0000	1.0000	1.0000	1.0000	1.0000	1.0000	1.0000
18	1.0000	1.0000	1.0000	1.0000	1.0000	1.0000	1.0000	1.0000	1.0000	1.0000
19	1.0000	1.0000	1.0000	1.0000	1.0000	1.0000	1.0000	1.0000	1.0000	1.0000

$\lambda =$	5.5	6.0	6.5	7.0	7.5	8.0	8.5	9.0	9.5	10.0
$x = 0$	0.0041	0.0025	0.0015	0.0009	0.0006	0.0003	0.0002	0.0001	0.0001	0.0000
1	0.0266	0.0174	0.0113	0.0073	0.0047	0.0030	0.0019	0.0012	0.0008	0.0005
2	0.0884	0.0620	0.0430	0.0296	0.0203	0.0138	0.0093	0.0062	0.0042	0.0028
3	0.2017	0.1512	0.1118	0.0818	0.0591	0.0424	0.0301	0.0212	0.0149	0.0103
4	0.3575	0.2851	0.2237	0.1730	0.1321	0.0996	0.0744	0.0550	0.0403	0.0293
5	0.5289	0.4457	0.3690	0.3007	0.2414	0.1912	0.1496	0.1157	0.0885	0.0671
6	0.6860	0.6063	0.5265	0.4497	0.3782	0.3134	0.2562	0.2068	0.1649	0.1301
7	0.8095	0.7440	0.6728	0.5987	0.5246	0.4530	0.3856	0.3239	0.2687	0.2202
8	0.8944	0.8472	0.7916	0.7291	0.6620	0.5925	0.5231	0.4557	0.3918	0.3328
9	0.9462	0.9161	0.8774	0.8305	0.7764	0.7166	0.6530	0.5874	0.5218	0.4579
10	0.9747	0.9574	0.9332	0.9015	0.8622	0.8159	0.7634	0.7060	0.6453	0.5830
11	0.9890	0.9799	0.9661	0.9467	0.9208	0.8881	0.8487	0.8030	0.7520	0.6968
12	0.9955	0.9912	0.9840	0.9730	0.9573	0.9362	0.9091	0.8758	0.8364	0.7916
13	0.9983	0.9964	0.9929	0.9872	0.9784	0.9658	0.9486	0.9261	0.8981	0.8645
14	0.9994	0.9986	0.9970	0.9943	0.9897	0.9827	0.9726	0.9585	0.9400	0.9165
15	0.9998	0.9995	0.9988	0.9976	0.9954	0.9918	0.9862	0.9780	0.9665	0.9513
16	0.9999	0.9998	0.9996	0.9990	0.9980	0.9963	0.9934	0.9889	0.9823	0.9730
17	1.0000	0.9999	0.9998	0.9996	0.9992	0.9984	0.9970	0.9947	0.9911	0.9857
18	1.0000	1.0000	0.9999	0.9999	0.9997	0.9993	0.9987	0.9976	0.9957	0.9928
19	1.0000	1.0000	1.0000	1.0000	0.9999	0.9997	0.9995	0.9989	0.9980	0.9965
20	1.0000	1.0000	1.0000	1.0000	1.0000	0.9999	0.9998	0.9996	0.9991	0.9984
21	1.0000	1.0000	1.0000	1.0000	1.0000	1.0000	0.9999	0.9998	0.9996	0.9993
22	1.0000	1.0000	1.0000	1.0000	1.0000	1.0000	1.0000	0.9999	0.9999	0.9997

PERCENTAGE POINTS OF THE χ^2 DISTRIBUTION

The values in the table are those which a random variable with the χ^2 distribution on ν degrees of freedom exceeds with the probability shown.

ν	0.995	0.990	0.975	0.950	0.900	0.100	0.050	0.025	0.010	0.005
1	0.000	0.000	0.001	0.004	0.016	2.705	3.841	5.024	6.635	7.879
2	0.010	0.020	0.051	0.103	0.211	4.605	5.991	7.378	9.210	10.597
3	0.072	0.115	0.216	0.352	0.584	6.251	7.815	9.348	11.345	12.838
4	0.207	0.297	0.484	0.711	1.064	7.779	9.488	11.143	13.277	14.860
5	0.412	0.554	0.831	1.145	1.610	9.236	11.070	12.832	15.086	16.750
6	0.676	0.872	1.237	1.635	2.204	10.645	12.592	14.449	16.812	18.548
7	0.989	1.239	1.690	2.167	2.833	12.017	14.067	16.013	18.475	20.278
8	1.344	1.646	2.180	2.733	3.490	13.362	15.507	17.535	20.090	21.955
9	1.735	2.088	2.700	3.325	4.168	14.684	16.919	19.023	21.666	23.589
10	2.156	2.558	3.247	3.940	4.865	15.987	18.307	20.483	23.209	25.188
11	2.603	3.053	3.816	4.575	5.580	17.275	19.675	21.920	24.725	26.757
12	3.074	3.571	4.404	5.226	6.304	18.549	21.026	23.337	26.217	28.300
13	3.565	4.107	5.009	5.892	7.042	19.812	22.362	24.736	27.688	29.819
14	4.075	4.660	5.629	6.571	7.790	21.064	23.685	26.119	29.141	31.319
15	4.601	5.229	6.262	7.261	8.547	22.307	24.996	27.488	30.578	32.801
16	5.142	5.812	6.908	7.962	9.312	23.542	26.296	28.845	32.000	34.267
17	5.697	6.408	7.564	8.672	10.085	24.769	27.587	30.191	33.409	35.718
18	6.265	7.015	8.231	9.390	10.865	25.989	28.869	31.526	34.805	37.156
19	6.844	7.633	8.907	10.117	11.651	27.204	30.144	32.852	36.191	38.582
20	7.434	8.260	9.591	10.851	12.443	28.412	31.410	34.170	37.566	39.997
21	8.034	8.897	10.283	11.591	13.240	29.615	32.671	35.479	38.932	41.401
22	8.643	9.542	10.982	12.338	14.042	30.813	33.924	36.781	40.289	42.796
23	9.260	10.196	11.689	13.091	14.848	32.007	35.172	38.076	41.638	44.181
24	9.886	10.856	12.401	13.848	15.659	33.196	36.415	39.364	42.980	45.558
25	10.520	11.524	13.120	14.611	16.473	34.382	37.652	40.646	44.314	46.928
26	11.160	12.198	13.844	15.379	17.292	35.563	38.885	41.923	45.642	48.290
27	11.808	12.879	14.573	16.151	18.114	36.741	40.113	43.194	46.963	49.645
28	12.461	13.565	15.308	16.928	18.939	37.916	41.337	44.461	48.278	50.993
29	13.121	14.256	16.047	17.708	19.768	39.088	42.557	45.722	49.588	52.336
30	13.787	14.953	16.791	18.493	20.599	40.256	43.773	46.979	50.892	53.672

PERCENTAGE POINTS OF STUDENT'S *t* DISTRIBUTION

The values in the table are those which a random variable with student's *t* distribution on *v* degrees of freedom exceeds with the probability shown.

v	0.10	0.05	0.025	0.01	0.005
1	3.078	6.314	12.706	31.821	63.657
2	1.886	2.920	4.303	6.965	9.925
3	1.638	2.353	3.182	4.541	5.841
4	1.533	2.132	2.776	3.747	4.604
5	1.476	2.015	2.571	3.365	4.032
6	1.440	1.943	2.447	3.143	3.707
7	1.415	1.895	2.365	2.998	3.499
8	1.397	1.860	2.306	2.896	3.355
9	1.383	1.833	2.262	2.821	3.250
10	1.372	1.812	2.228	2.764	3.169
11	1.363	1.796	2.201	2.718	3.106
12	1.356	1.782	2.179	2.681	3.055
13	1.350	1.771	2.160	2.650	3.012
14	1.345	1.761	2.145	2.624	2.977
15	1.341	1.753	2.131	2.602	2.947
16	1.337	1.746	2.120	2.583	2.921
17	1.333	1.740	2.110	2.567	2.898
18	1.330	1.734	2.101	2.552	2.878
19	1.328	1.729	2.093	2.539	2.861
20	1.325	1.725	2.086	2.528	2.845
21	1.323	1.721	2.080	2.518	2.831
22	1.321	1.717	2.074	2.508	2.819
23	1.319	1.714	2.069	2.500	2.807
24	1.318	1.711	2.064	2.492	2.797
25	1.316	1.708	2.060	2.485	2.787
26	1.315	1.706	2.056	2.479	2.779
27	1.314	1.703	2.052	2.473	2.771
28	1.313	1.701	2.048	2.467	2.763
29	1.311	1.699	2.045	2.462	2.756
30	1.310	1.697	2.042	2.457	2.750
32	1.309	1.694	2.037	2.449	2.738
34	1.307	1.691	2.032	2.441	2.728
36	1.306	1.688	2.028	2.435	2.719
38	1.304	1.686	2.024	2.429	2.712
40	1.303	1.684	2.021	2.423	2.704
45	1.301	1.679	2.014	2.412	2.690
50	1.299	1.676	2.009	2.403	2.678
55	1.297	1.673	2.004	2.396	2.668
60	1.296	1.671	2.000	2.390	2.660
70	1.294	1.667	1.994	2.381	2.648
80	1.292	1.664	1.990	2.374	2.639
90	1.291	1.662	1.987	2.369	2.632
100	1.290	1.660	1.984	2.364	2.626
110	1.289	1.659	1.982	2.361	2.621
120	1.289	1.658	1.980	2.358	2.617

CRITICAL VALUES FOR CORRELATION COEFFICIENTS

These tables concern tests of the hypothesis that a population correlation coefficient ρ is 0. The values in the tables are the minimum values which need to be reached by a sample correlation coefficient in order to be significant at the level shown, on a one-tailed test.

Sample Level	Product Moment Coefficient				
	Level				
	0.10	0.05	0.025	0.01	0.005
4	0.8000	0.9000	0.9500	0.9800	0.9900
5	0.6870	0.8054	0.8783	0.9343	0.9587
6	0.6084	0.7293	0.8114	0.8822	0.9172
7	0.5509	0.6694	0.7545	0.8329	0.8745
8	0.5067	0.6215	0.7067	0.7887	0.8343
9	0.4716	0.5822	0.6664	0.7498	0.7977
10	0.4428	0.5494	0.6319	0.7155	0.7646
11	0.4187	0.5214	0.6021	0.6851	0.7348
12	0.3981	0.4973	0.5760	0.6581	0.7079
13	0.3802	0.4762	0.5529	0.6339	0.6835
14	0.3646	0.4575	0.5324	0.6120	0.6614
15	0.3507	0.4409	0.5140	0.5923	0.6411
16	0.3383	0.4259	0.4973	0.5742	0.6226
17	0.3271	0.4124	0.4821	0.5577	0.6055
18	0.3170	0.4000	0.4683	0.5425	0.5897
19	0.3077	0.3887	0.4555	0.5285	0.5751
20	0.2992	0.3783	0.4438	0.5155	0.5614
21	0.2914	0.3687	0.4329	0.5034	0.5487
22	0.2841	0.3598	0.4227	0.4921	0.5368
23	0.2774	0.3515	0.4133	0.4815	0.5256
24	0.2711	0.3438	0.4044	0.4716	0.5151
25	0.2653	0.3365	0.3961	0.4622	0.5052
26	0.2598	0.3297	0.3882	0.4534	0.4958
27	0.2546	0.3233	0.3809	0.4451	0.4869
28	0.2497	0.3172	0.3739	0.4372	0.4785
29	0.2451	0.3115	0.3673	0.4297	0.4705
30	0.2407	0.3061	0.3610	0.4226	0.4629
40	0.2070	0.2638	0.3120	0.3665	0.4026
50	0.1843	0.2353	0.2787	0.3281	0.3610
60	0.1678	0.2144	0.2542	0.2997	0.3301
70	0.1550	0.1982	0.2352	0.2776	0.3060
80	0.1448	0.1852	0.2199	0.2597	0.2864
90	0.1364	0.1745	0.2072	0.2449	0.2702
100	0.1292	0.1654	0.1966	0.2324	0.2565

Cycle indices for 3D rotational symmetry groups acting on:

Vertices of a Tetrahedron	$\frac{1}{12}(x_1^4 + 8x_1^1x_3^1 + 3x_2^2)$
Faces of a Tetrahedron	$\frac{1}{12}(x_1^4 + 8x_1^1x_3^1 + 3x_2^2)$
Edges of a Tetrahedron	$\frac{1}{12}(x_1^6 + 8x_3^2 + 3x_1^2x_2^2)$
Vertices of a Cube	$\frac{1}{24}(x_1^8 + 8x_1^2x_3^2 + 9x_2^4 + 6x_4^2)$
Faces of a Cube	$\frac{1}{24}(x_1^6 + 6x_1^2x_4^1 + 3x_1^2x_2^2 + 6x_2^3 + 8x_3^2)$
Edges of a Cube	$\frac{1}{24}\left(x_1^{12} + 3x_2^6 + 6x_1^2x_2^5 + 6x_4^3 + 8x_3^4\right)$
Vertices of an Octahedron	$\frac{1}{24}(x_1^6 + 6x_1^2x_4^1 + 3x_1^2x_2^2 + 6x_2^3 + 8x_3^2)$
Faces of an Octahedron	$\frac{1}{24}(x_1^8 + 8x_1^2x_3^2 + 9x_2^4 + 6x_4^2)$
Edges of an Octahedron	$\frac{1}{24}\left(x_1^{12} + 3x_2^6 + 6x_1^2x_2^5 + 6x_4^3 + 8x_3^4\right)$

Cycle Indices for 3D rotational symmetry groups (rotation plus flip) acting on polygons.

Polygon with p (prime) vertices	$\frac{1}{2p}\left(x_1^p + (p-1)x_p^1 + px_1^1x_2^{\frac{p-1}{2}}\right)$
Square	$\frac{1}{8}(x_1^4 + 3x_2^2 + 2x_4^1 + 2x_1^2x_2^1)$
Hexagon	$\frac{1}{12}(x_1^6 + 4x_2^3 + 2x_3^2 + 2x_6^1 + 3x_1^2x_2^2)$
Octagon	$\frac{1}{16}(x_1^8 + 4x_1^2x_2^3 + 5x_2^4 + 2x_4^2 + 4x_8^1)$
Nonagon	$\frac{1}{18}(x_1^9 + 9x_1^1x_2^4 + 6x_9^1 + 2x_3^3)$
Decagon	$\frac{1}{20}\left(x_1^{10} + 6x_2^5 + 4x_5^2 + 4x_{10}^1 + 5x_1^2x_2^4\right)$
Dodecagon	$\frac{1}{24}\left(x_1^{12} + 7x_2^6 + 2x_3^4 + 2x_4^3 + 2x_6^2 + 4x_{12}^1 + 6x_1^2x_2^5\right)$

Centre Number

Candidate Number

Rewarding Learning

ADVANCED SUBSIDIARY (AS)
General Certificate of Education
2024

ANSWER BOOKLET

Subject

Further Mathematics

Unit

2

Component Code

SFM21

SFM21

Applied Mathematics

INSTRUCTIONS TO CANDIDATES

Read these instructions carefully.

Write your Centre Number and Candidate Number in the spaces provided at the top of this page.

You must answer the questions or question parts in the dedicated spaces provided within this Answer Booklet.

Do not write outside the boxed area on each page or on blank pages.

Complete in black ink only. **Do not write with a gel pen.**

Questions which require drawing or sketching should be completed using an HB pencil.

You must answer **all** questions from Sections A and B **or** A and C **or** A and D **or** C and D.

You should spend equal time on each of the two sections.

Show clearly the full development of your answers. **Answers without working may not gain full credit.**

Answers should be given to three significant figures unless otherwise stated.

14954

44SFM2101

BLANK PAGE

DO NOT WRITE ON THIS PAGE

Question Number	SECTION A Mechanics 1
A1	

Question Number	SECTION A Mechanics 1
A2 (i)	
A2 (ii)	

Question Number	SECTION A Mechanics 1
A2 (iii)	

Question Number	SECTION A Mechanics 1
A3 (a)	

Question Number	SECTION A Mechanics 1
A3 (b) (i)	
A3 (b) (ii)	

Question Number	SECTION A Mechanics 1
A4 (i)	

Question Number	SECTION A Mechanics 1
A4 (ii)	
A4 (iii)	

Question Number	SECTION A Mechanics 1
A5 (i)	
A5 (ii)	

Question Number	SECTION A Mechanics 1
A5 (iii)	

Question Number	SECTION B Mechanics 2
B1 (i)	
B1 (ii)	

Question Number	SECTION B Mechanics 2
B1 (iii)	

Question Number	SECTION B Mechanics 2
B2	

Question Number	SECTION B Mechanics 2
B3 (i)	
B3 (ii)	

Question Number	SECTION B Mechanics 2
B3 (iii)	

Question Number	SECTION B Mechanics 2
B3 (iv)	

Question Number	SECTION B Mechanics 2
B4	

Question Number	SECTION B Mechanics 2

Question Number	SECTION B Mechanics 2
B5 (i)	
B5 (ii)	

Question Number	SECTION B Mechanics 2
B5 (iii)	

BLANK PAGE

DO NOT WRITE ON THIS PAGE

Question Number	SECTION C Statistics
C1 (i)	
C1 (ii)	
C1 (iii)	

Question Number	SECTION C Statistics
C2 (i)	
C2 (ii)	

Question Number	SECTION C Statistics
C2 (iii)	
C2 (iv)	

Question Number	SECTION C Statistics
C3 (i)	
C3 (ii)	

Question Number	SECTION C Statistics
C3 (iii)	
C3 (iv)	

Question Number	SECTION C Statistics
C4 (i)	
C4 (ii)	

Question Number	SECTION C Statistics
C4 (iii)	

Question Number	SECTION C Statistics
C5 (a) (i)	
C5 (a) (ii)	

Question Number	SECTION C Statistics
C5 (b) (i)	
C5 (b) (ii)	

BLANK PAGE

DO NOT WRITE ON THIS PAGE

Question Number	SECTION D Discrete and Decision Mathematics
D1 (i)	
D1 (ii)	
D1 (iii)	

Question Number	SECTION D Discrete and Decision Mathematics
D2 (i)	
D2 (ii)	

Question Number	SECTION D Discrete and Decision Mathematics
D2 (iii)	

BLANK PAGE

DO NOT WRITE ON THIS PAGE

Question Number	SECTION D Discrete and Decision Mathematics
D3 (a) (i)	
D3 (a) (ii)	

Question Number	SECTION D Discrete and Decision Mathematics

D3 (b) (i)

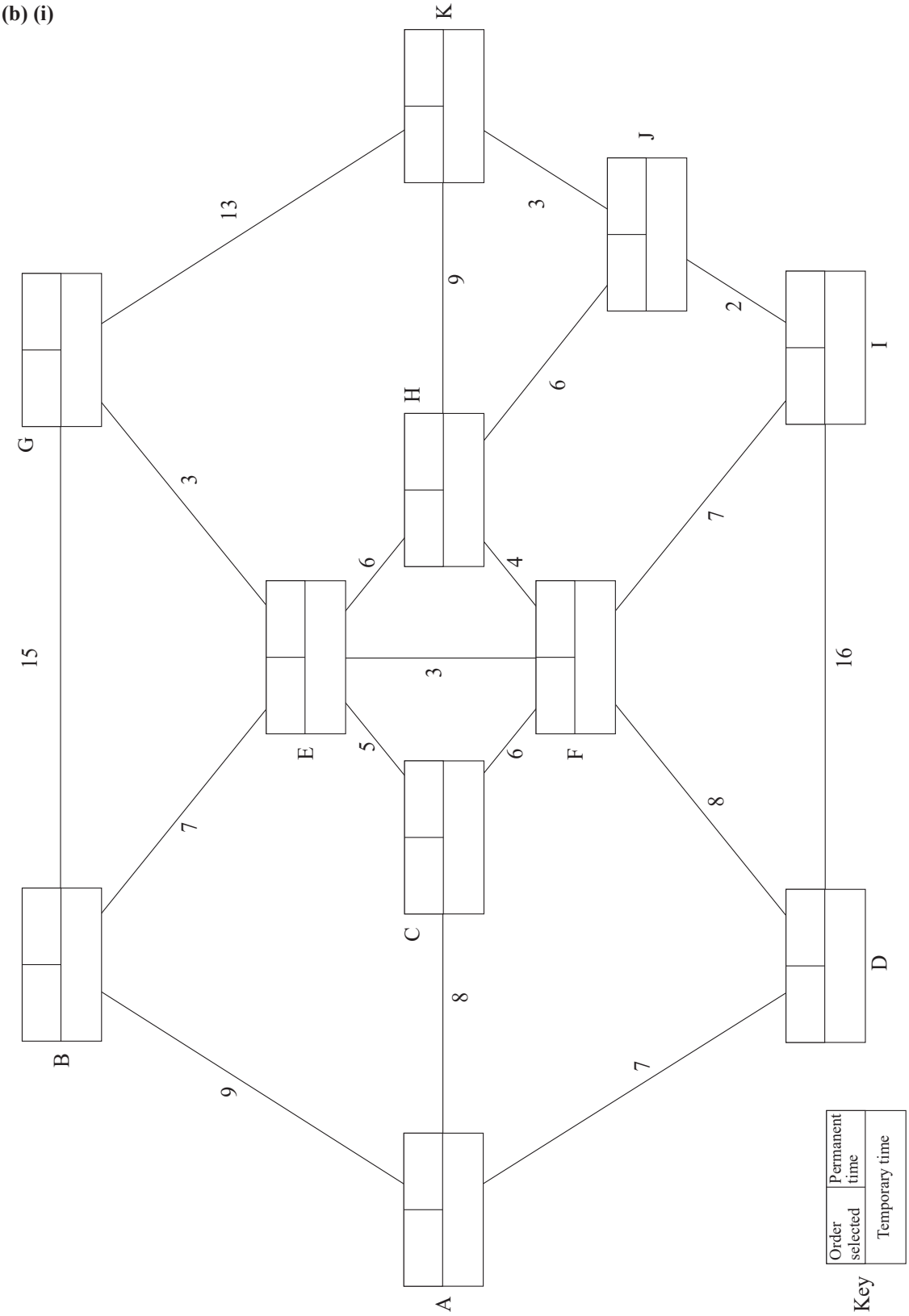

Diagram 1

Question Number	SECTION D Discrete and Decision Mathematics
D3 (b) (ii)	
D3 (b) (iii)	

BLANK PAGE

DO NOT WRITE ON THIS PAGE

Question Number	SECTION D Discrete and Decision Mathematics
D4 (i)	
D4 (ii)	

Question Number	SECTION D Discrete and Decision Mathematics
D5 (i)	
D5 (ii)	
D5 (iii)	

Question Number	SECTION D Discrete and Decision Mathematics
D5 (iv)	

$\times_{16}$	1	7	9	15
1	1	7	9	15
7			15	
9				
15				

Fig. 6

D5 (v)

THIS IS THE END OF THE ANSWER BOOKLET

DO NOT WRITE ON THIS PAGE

Permission to reproduce all copyright material has been applied for.
In some cases, efforts to contact copyright holders may have been unsuccessful and CCEA will be happy to rectify any omissions of acknowledgement in future if notified.