Rewarding Learning

ADVANCED SUBSIDIARY (AS)
General Certificate of Education
2019

Centre Number

Candidate Number

Biology

Assessment Unit AS 3
assessing
Practical Skills in AS Biology

[SBY31]

SBY31

THURSDAY 2 MAY, MORNING

TIME

1 hour.

INSTRUCTIONS TO CANDIDATES

Write your Centre Number and Candidate Number in the spaces provided at the top of this page.
You must answer the questions in the spaces provided.
Do not write outside the boxed area on each page or on blank pages.
Complete in black ink only. **Do not write with a gel pen.**
Answer **all eight** questions.

INFORMATION FOR CANDIDATES

The total mark for this paper is 50.
Figures in brackets printed down the right-hand side of pages indicate the marks awarded to each question or part question.
You are reminded of the need for good English and clear presentation in your answers.
Use accurate scientific terminology in all answers.

12158

20SBY3101

BLANK PAGE

DO NOT WRITE ON THIS PAGE

1 The diagram below represents two ways of sampling animal populations, labelled **A** and **B**. (The diagrams are not drawn to scale.)

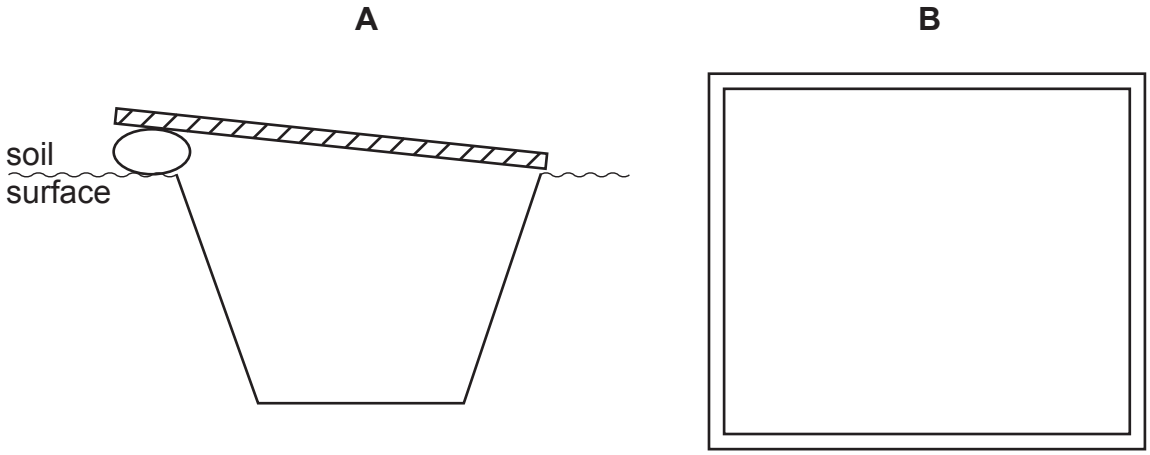

(a) Complete the table below by naming each sampling device shown and suggesting the type of animal each could be used to sample.

	Sampling device	Type of animal sampled
A		
B		

[4]

(b) Suggest **one** precaution necessary when using apparatus **A** to ensure successful sampling of the population.

_____

_____

_____ [1]

[Turn over

2 The photograph below shows a section through a water lily (*Nymphaea alba*) leaf. A student drew a block diagram of this section and this is also shown. The block diagram includes some errors.

Photograph

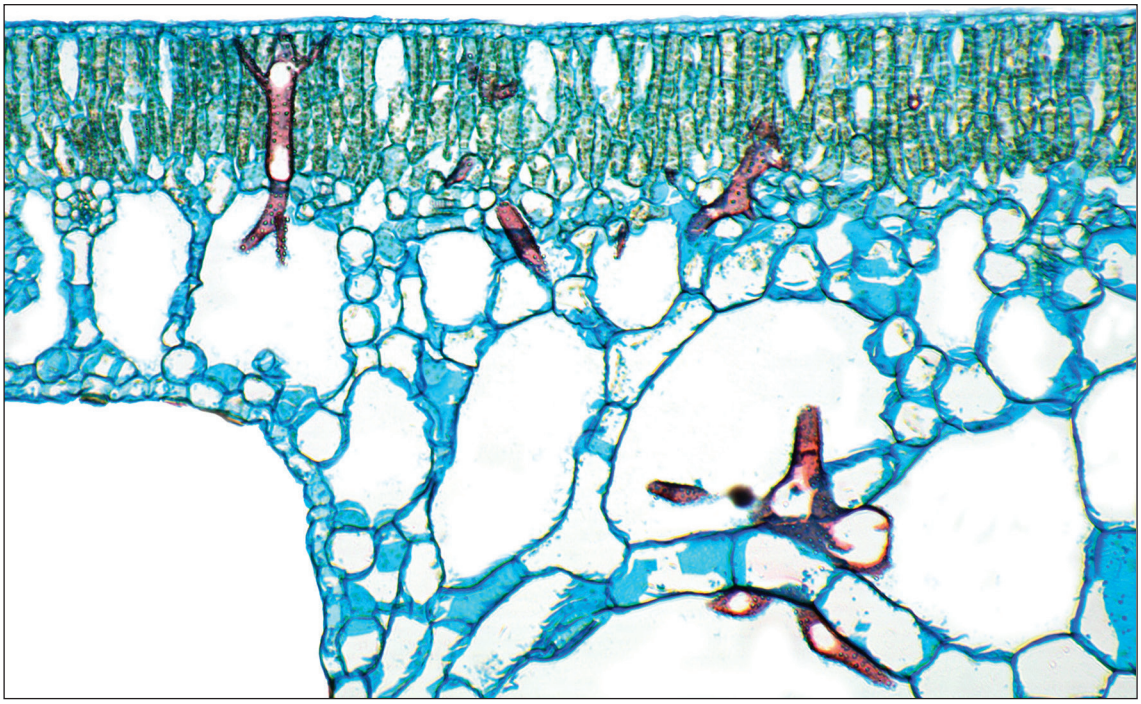

© Dr Keith Wheeler / Science Photo Library

Block diagram

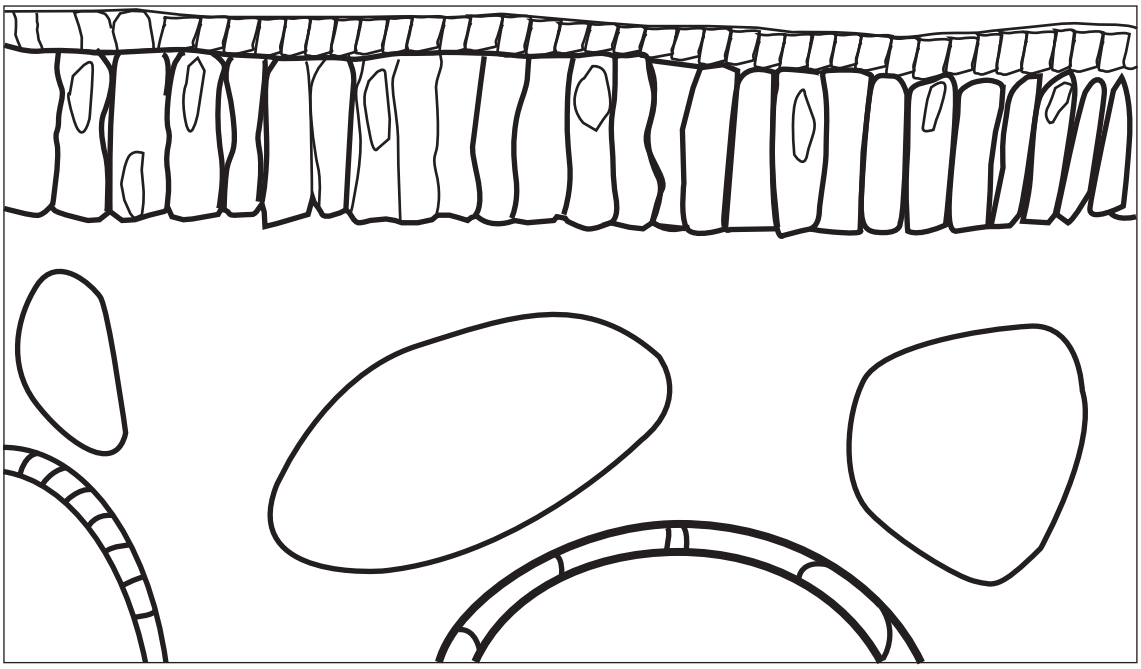

(a) On the **photograph** label

- the main photosynthetic layer with an **X**
- a feature that adapts the water lily to survive in water with a **Y**. [2]

(b) Describe **three** errors that can be seen in the block diagram.

1. _____

_____

_____

2. _____

_____

_____

3. _____

_____

_____ [3]

3 An investigation was carried out into the effect of temperature on the hydrolysis of starch by amylase.

Three water baths were set up at 20ºC, 40ºC and 60ºC. Equal volumes of starch and amylase solutions were placed in separate test tubes in each water bath for 5 minutes, before being mixed. At this point a stopclock was started.

The mixtures were sampled initially and then every 2 minutes for 12 minutes and tested with iodine for the presence of starch. Measurements of transmission of light were taken using a colorimeter.

(a) State the appropriate colour of filter to be used in the colorimeter.

_____ [1]

The results of this investigation are shown in the table below. The temperatures shown represent the temperature of each water bath.

Time/minutes	**Transmission of light/%**		
	20ºC	**40ºC**	**60ºC**
0	7	8	6
2	15	24	11
4	23	48	12
6	42	66	11
8	58	52	13
10	75	92	11
12	86	97	11

(b) **(i)** Identify the anomalous result at 40ºC and suggest **two** possible ways in which this anomaly could have arisen.

Anomalous result _____

1. _____

_____

_____

2. _____

_____

_____ [3]

(ii) At 60°C, the percentage transmission of light remains low throughout. However, there is a small increase from 0 – 2 minutes. Suggest a reason for this small increase.

_____

_____

_____ [1]

(c) Describe briefly how the colorimeter measurements could be converted from % transmission to starch concentrations.

_____

_____

_____

_____

_____ [2]

4 A student was asked to test a solution for the presence of protein and non-reducing sugar.

Complete the table below with the names of the reagent(s) and/or chemical(s) required for each test and a description of the colour **change** which would indicate a positive result.

Test	**Reagent(s) and/or chemical(s) required**	**Positive colour change**
Protein		
Non-reducing sugar		

[5]

5 A photograph of the dissected left side of a sheep's heart is shown below.

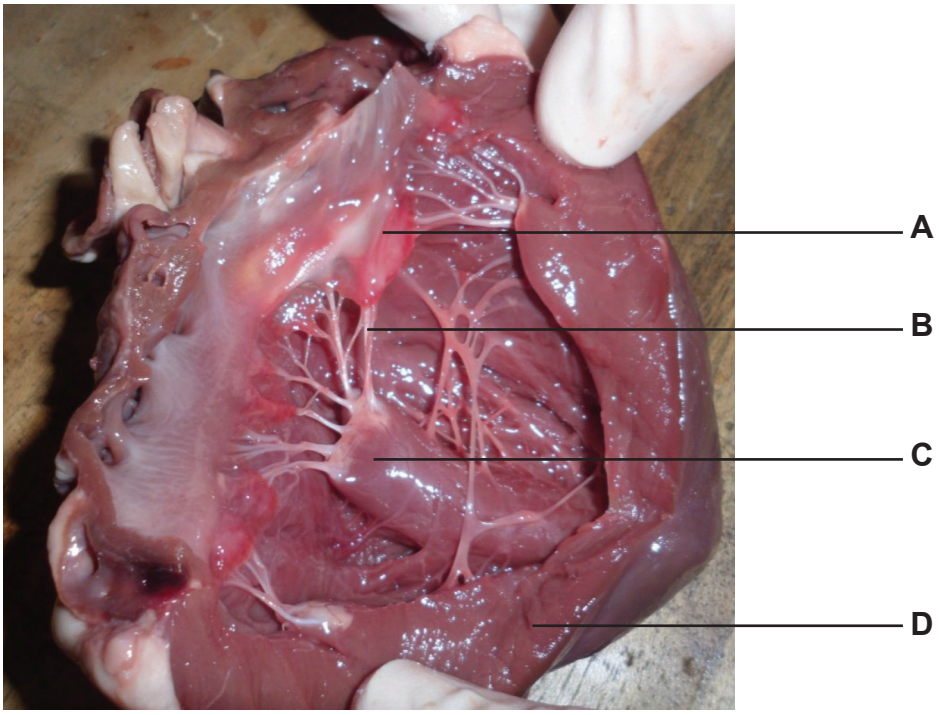

© CCEA

(a) Name the structures labelled **A – D**.

A _____

B _____

C _____

D _____ [4]

(b) Describe and explain how **one** of these structures (**A – D**) would differ on the right side of the heart.

_____

_____

_____

_____ [2]

[Turn over

6 Paper chromatography can be used to identify unknown amino acids in a solution.

Describe how to **set up** and **develop** a chromatogram to identify unknown amino acids in a solution.

Include **one** safety precaution necessary in this experiment.

Setting up

_____

_____

_____

_____

_____

_____

_____

_____

_____

_____

_____

Development

_____

_____

_____

_____

_____ [6]

BLANK PAGE

DO NOT WRITE ON THIS PAGE

(Questions continue overleaf)

7 The photograph below shows onion cells in a root tip.

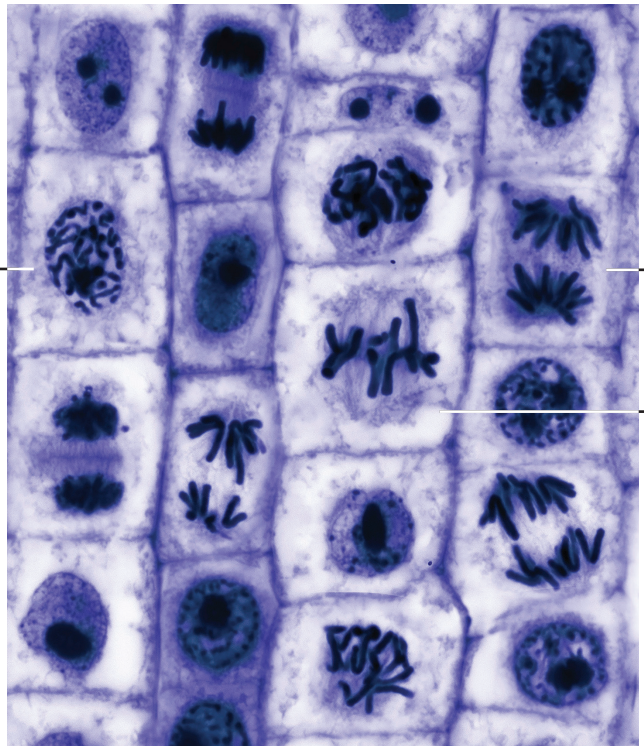

© Steve Gschmeissner / Science Photo Library

30 μm

(a) Name the stage of mitosis occurring in each of the cells labelled **A – C**.

A _____

B _____

C _____ [3]

(b) Using the scale bar, calculate the magnification of the photograph.

(Show your working.)

_____ [3]

(c) Name a stain that can be used when investigating mitosis in root tips and explain why a stain is necessary.

Stain _____

Explanation _____

_____

_____ [2]

8 An investigation was carried out into the distribution of the woodland plant bluebell *(Hyacinthoides non-scripta)*.

A student set up a transect from the edge of an area of woodland towards its centre. At 10 metre intervals along the transect, percentage cover of *H. non-scripta* was recorded. At each transect position, light intensity was measured and recorded.

The results are shown in the table below.

Transect position/m	**Light intensity/ arbitrary units**	**Percentage cover of *H. non-scripta***
0	27	0
10	27	0
20	25	5
30	26	0
40	19	20
50	14	35
60	24	5
70	13	35
80	11	45
90	10	65
100	8	75

(a) Use the data to plot a scatter graph to investigate if a correlation exists between **percentage cover** of *H. non-scripta* and **light intensity**. [3]

Percentage cover of *H. non-scripta* against light intensity in an area of woodland

BLANK PAGE

DO NOT WRITE ON THIS PAGE

(b) Describe the trend shown in the graph.

_____

_____

_____ [1]

(c) **(i)** Name the apparatus used to measure light intensity.

_____ [1]

(ii) Suggest a reason for the increase in light intensity shown in the table at 60 m.

_____

_____

_____ [1]

(iii) Suggest how the student would have ensured that the data for light intensity at each sampling point was valid.

_____

_____

_____ [1]

(d) State **one** other abiotic factor which would be expected to change along the transect used by the student.

_____ [1]

THIS IS THE END OF THE QUESTION PAPER

BLANK PAGE

DO NOT WRITE ON THIS PAGE

BLANK PAGE

DO NOT WRITE ON THIS PAGE

DO NOT WRITE ON THIS PAGE

For Examiner's use only	
Question Number	Marks
1	
2	
3	
4	
5	
6	
7	
8	
Total Marks	

Examiner Number

Permission to reproduce all copyright material has been applied for.
In some cases, efforts to contact copyright holders may have been unsuccessful and CCEA will be happy to rectify any omissions of acknowledgement in future if notified.