Rewarding Learning

ADVANCED

General Certificate of Education

2019

Centre Number

Candidate Number

Physics

Assessment Unit A2 3A

assessing

Practical Techniques and Data Analysis

APH31

[APH31]

WEDNESDAY 8 MAY, MORNING

TIME

1 hour.

INSTRUCTIONS TO CANDIDATES

Write your Centre Number and Candidate Number in the spaces provided at the top of this page.
Write your answers in the spaces provided in this question paper.
Answer **both** questions.
The Supervisor will tell you the order in which you are to answer the questions. Not more than 28 minutes are to be spent in answering each question, and after 26 minutes you must stop using the apparatus in Questions 1 and 2 so that it can be re-arranged for the next candidate. At the end of the 28-minute period you will be instructed to move to the station for the next question. At the end of the Test a 4-minute period will be provided for you to complete your answer to any question, but you will not have access to the apparatus during this time.

INFORMATION FOR CANDIDATES

The total mark for this paper is 40.
Figures in brackets printed down the right-hand side of pages indicate the marks awarded to each question or part question.
You may use an electronic calculator.

For Examiner's use only		
Question Number	Marks	Remark
1		
2		
Total Marks		

1 In this experiment you will investigate the oscillations of a mass suspended from a spring system.

Aims

The aims of the experiment are:

- to measure the extended length and period of oscillation of the spring system as the mass attached is increased;
- to analyse the results and plot a linear graph;
- to use the results to find a value for the unknown constant.

Apparatus

You are provided with a spring system of total length L_0, which consists of three springs connected in series. The spring system is suspended from a clamp on a retort stand as shown in **Fig. 1.1**.

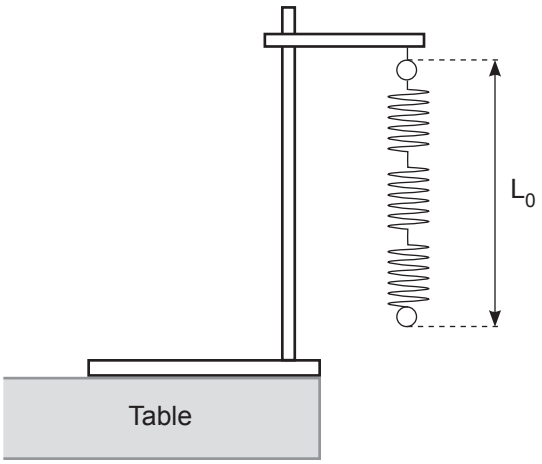

Fig. 1.1

© CCEA

A 100 g mass hanger, four 100 g masses, a stopclock and a metre rule are also provided.

Procedure

(a) Attach the 100 g mass hanger to the bottom of the spring system.

Measure the length L of the spring system as shown in **Fig. 1.2** and record the value in **Table 1.1**.

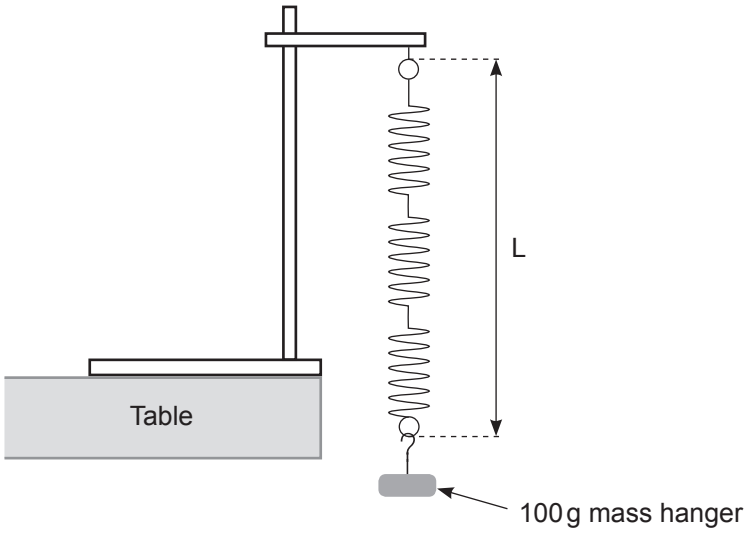

Fig. 1.2

© CCEA

Displace and release the mass so that it oscillates **vertically** with small amplitude. Take readings to allow you to determine an accurate value for the period of oscillation T.

Record all your results in **Table 1.1** adding any extra headings required.

Repeat the procedure until you have five sets of corresponding values of L and T for the masses up to 500 g.

Table 1.1

Mass / g	L / m		T / s	
100				
200				
300				
400				
500				

[4]

Examiner Only	
Marks	Remark

Theory

Theory suggests that the relationship between T and L is given by **Equation 1.1**.

$$T = 2\pi\sqrt{\frac{L - L_0}{P}} \qquad \textbf{Equation 1.1}$$

where P and L_0 are constants.

(b) Show that a graph of T^2 against L will result in a straight line from which the values of the constants P and L_0 can be determined.

[3]

(c) **(i)** To draw the graph, it is necessary to calculate additional quantities from your results. Complete the final blank column of **Table 1.1** with an appropriate heading and values recorded to **2 decimal places**. [2]

(ii) Plot the graph of T^2 against L on the grid of **Fig. 1.3** and draw the best-fit straight line for the points plotted. [5]

Examiner Only	
Marks	Remark

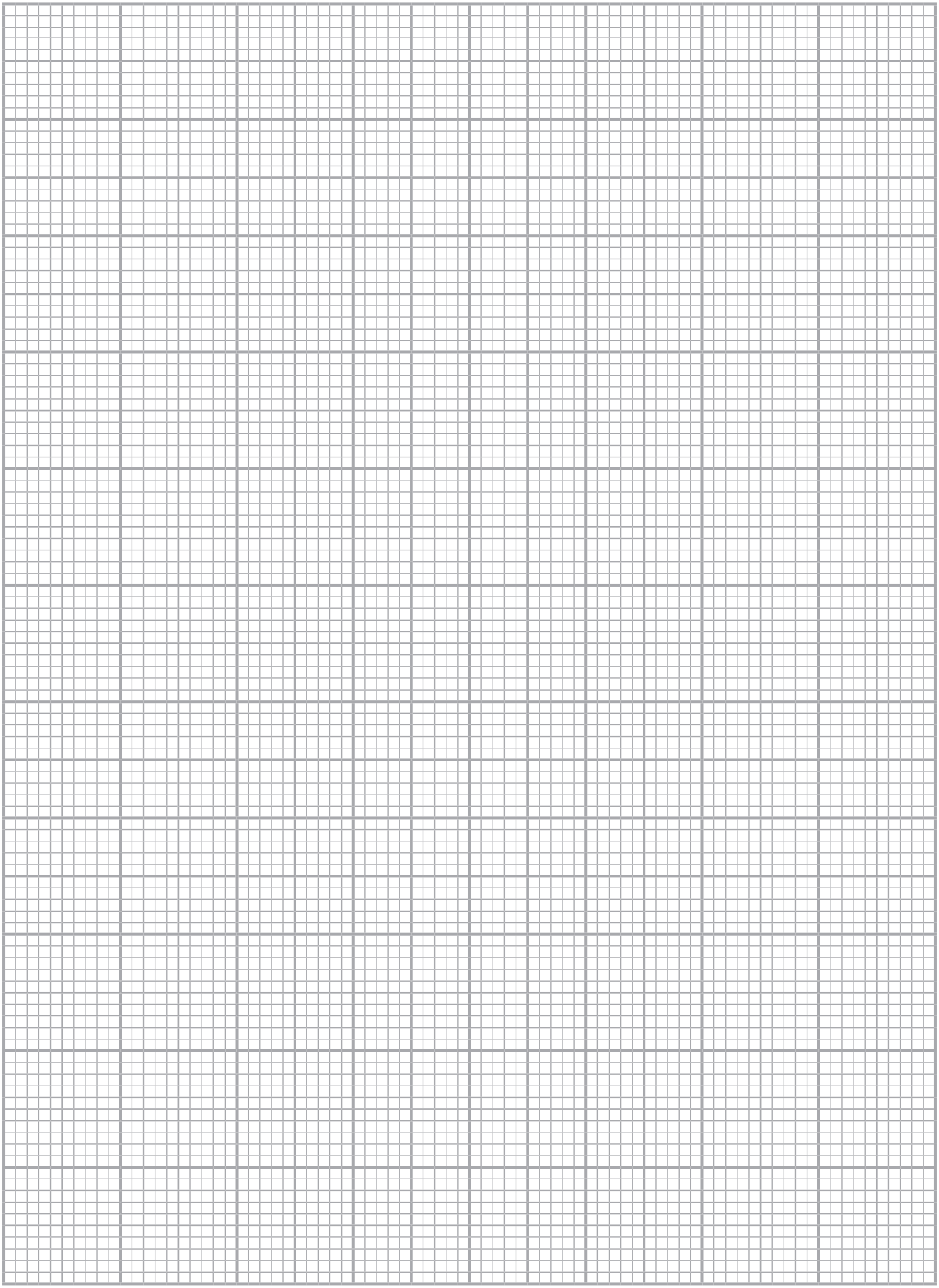

Fig. 1.3

(iii) Calculate the gradient of your graph.

Gradient = _____ [3]

(iv) Use the value of the gradient from part **(iii)** to obtain a value for the constant P. Include an appropriate unit for P.

P = _____ Unit _____ [2]

(d) What does the intercept of your graph with the L-axis represent?

_____

_____ [1]

Examiner Only	
Marks	Remark

BLANK PAGE

(Questions continue overleaf)

2 In this experiment you will investigate the discharge of capacitors through a resistor.

Aims

The aims of the experiment are:
- to take measurements of the discharging current as a function of time;
- to use the results to plot two discharge curves;
- to use these plots to obtain values for the two time constants;
- to deduce the values of the capacitance of the two capacitors.

Apparatus

The circuit has been constructed as shown in **Fig. 2.1** with the "flying lead" connected to terminal A of the box containing two capacitors.

A microammeter has been provided to measure the current when the capacitor is discharged through the 33 kΩ resistor, marked R.

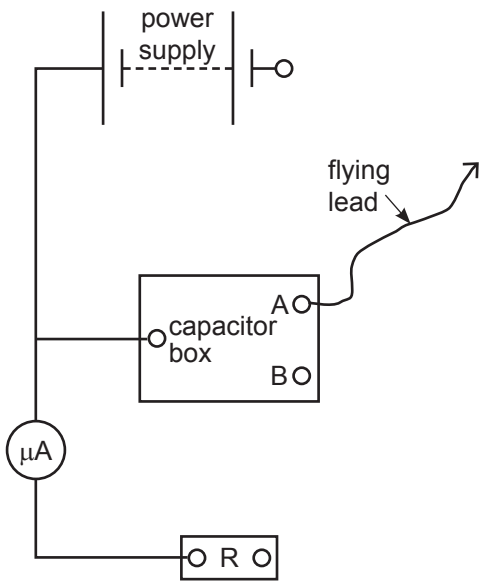

Fig. 2.1

(a) (i) Connect the flying lead to the negative terminal of the power supply in order to charge the first capacitor.

Remove the flying lead from the power supply and connect it to resistor R to discharge the capacitor. At the same time start the stopclock. You are to take a series of current I readings at **twenty** second intervals for **120 s**.

Record your results in **Table 2.1**.

Table 2.1

t / s	0	20	40	60	80	100	120
I / μA							

[2]

(ii) Using the grid on **Fig. 2.2** plot the values of current I against time t.

Select suitable scales, label the axes, plot the values and draw a best-fit curve for the points plotted. [5]

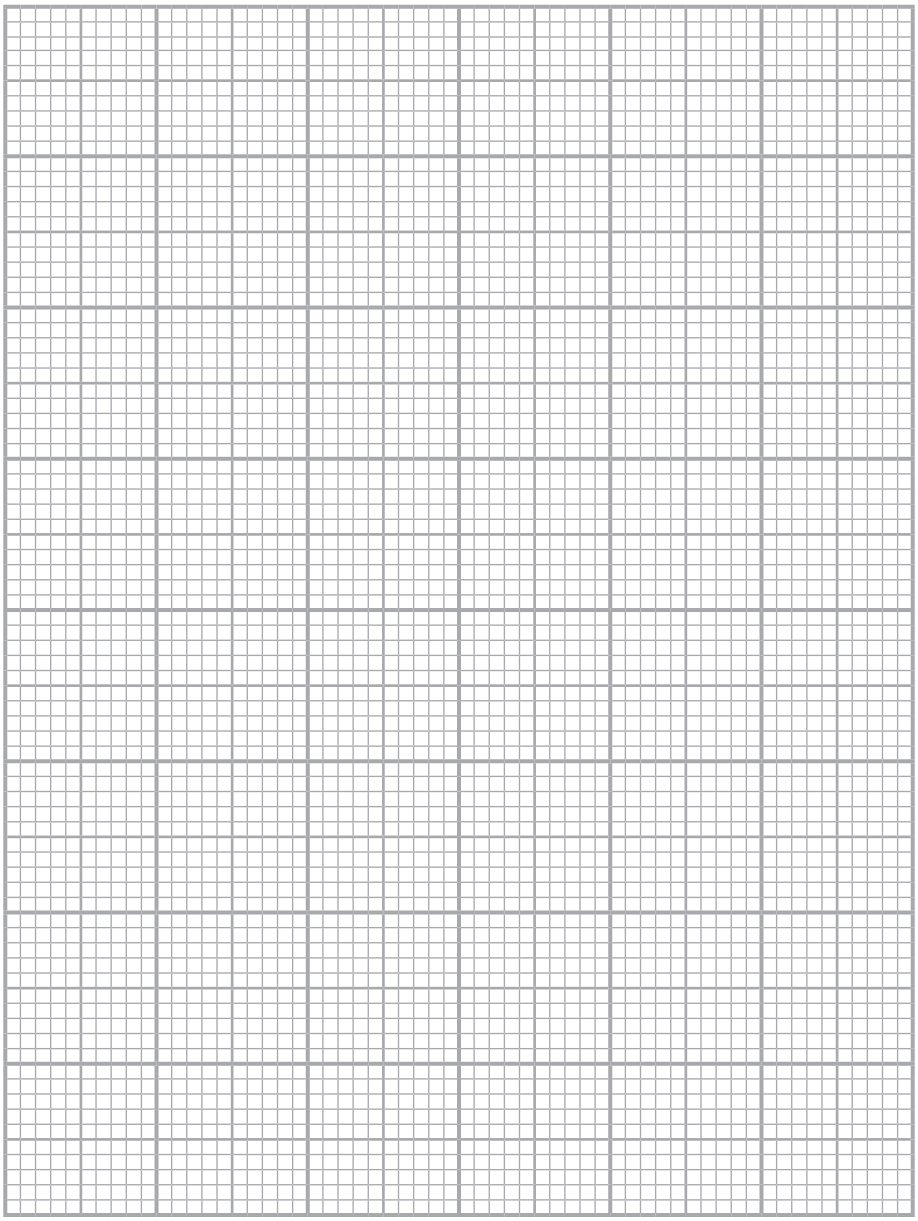

Fig. 2.2

Examiner Only	
Marks	Remark

The time constant τ is equal to the time taken for the current to reduce to 37% of its initial value.

(iii) From your graph find a **reliable** value for the time constant τ and record the value.

τ = _____ s [4]

The time constant τ equals the product of the resistance R and capacitance C.

(iv) Determine the value of the capacitance of the first capacitor.

Capacitance = _____ μF [2]

(b) Disconnect the flying lead from resistor R. Change the connection point of the flying lead on the capacitor box from A to B as shown in **Fig. 2.3**.

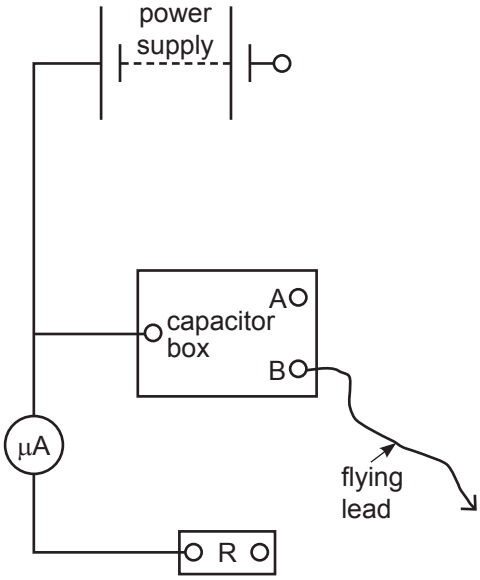

Fig. 2.3

Examiner Only	
Marks	Remark

By connecting to terminal point B a second different capacitor is placed in **series** with the first capacitor.

Reconnect the flying lead to the power supply to charge both capacitors.

(i) Repeat the measurement of discharge current by removing the flying lead from the power supply and connect it to resistor R to discharge the two capacitors. At the same time start the stopclock. Take current I readings every **ten** seconds for **60 s**.

Record your results in **Table 2.2**.

Table 2.2

t / s	**0**	**10**	**20**	**30**	**40**	**50**	**60**
I / μA							

[1]

(ii) Using the **same grid**, **Fig. 2.2**, plot the values of current I against time t and draw a best-fit curve for the points plotted. [2]

(iii) From your graph determine the new value of the time constant τ.

τ = _____ s [1]

(iv) Using the equation for capacitors connected in series, **Equation 2.1**, determine the value of the capacitance of the second capacitor.

$$\frac{1}{C_{TOTAL}} = \frac{1}{C_1} + \frac{1}{C_2}$$ **Equation 2.1**

Capacitance = _____ μF [3]

Examiner Only	
Marks	Remark

THIS IS THE END OF THE QUESTION PAPER

Permission to reproduce all copyright material has been applied for.
In some cases, efforts to contact copyright holders may have been unsuccessful and CCEA will be happy to rectify any omissions of acknowledgement in future if notified.

249834