New Specification

Rewarding Learning

ADVANCED
General Certificate of Education
2018

Centre Number

Candidate Number

Physics

Assessment Unit A2 2

assessing

Fields, Capacitors and Particle Physics

APH21

[APH21]

FRIDAY 8 JUNE, MORNING

TIME

2 hours.

INSTRUCTIONS TO CANDIDATES

Write your Centre Number and Candidate Number in the spaces provided at the top of this page.
You must answer the questions in the spaces provided.
Do not write outside the boxed area on each page or on blank pages.
Complete in black ink only. **Do not write with a gel pen.**
Answer **all nine** questions.

INFORMATION FOR CANDIDATES

The total mark for this paper is 100.
Quality of written communication will be assessed in Question **5(a)(ii)**.
Figures in brackets printed down the right-hand side of pages indicate the marks awarded to each question or part question.
Your attention is drawn to the Data and Formulae Sheet which is inside this question paper.
You may use an electronic calculator.

11161.04**R**

1 The **time constant** of a resistor–capacitor (R–C) circuit can be determined using the circuit shown in **Fig. 1.1**.

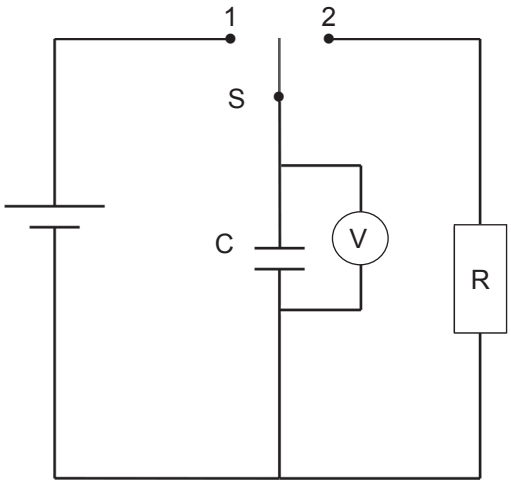

Fig. 1.1

(a) (i) Define the term **time constant**.

_____

_____ [1]

(ii) Describe how the circuit in **Fig. 1.1** could be used to obtain results that would allow the time constant to be determined. The capacitor is initially uncharged.

_____

_____

_____

_____

_____

_____ [3]

(b) (i) The results obtained in **(a) (ii)** can be used to plot a **non-linear** graph from which the time constant can be obtained. Label the axes on **Fig. 1.2** and sketch the shape of the graph that you would expect to obtain.

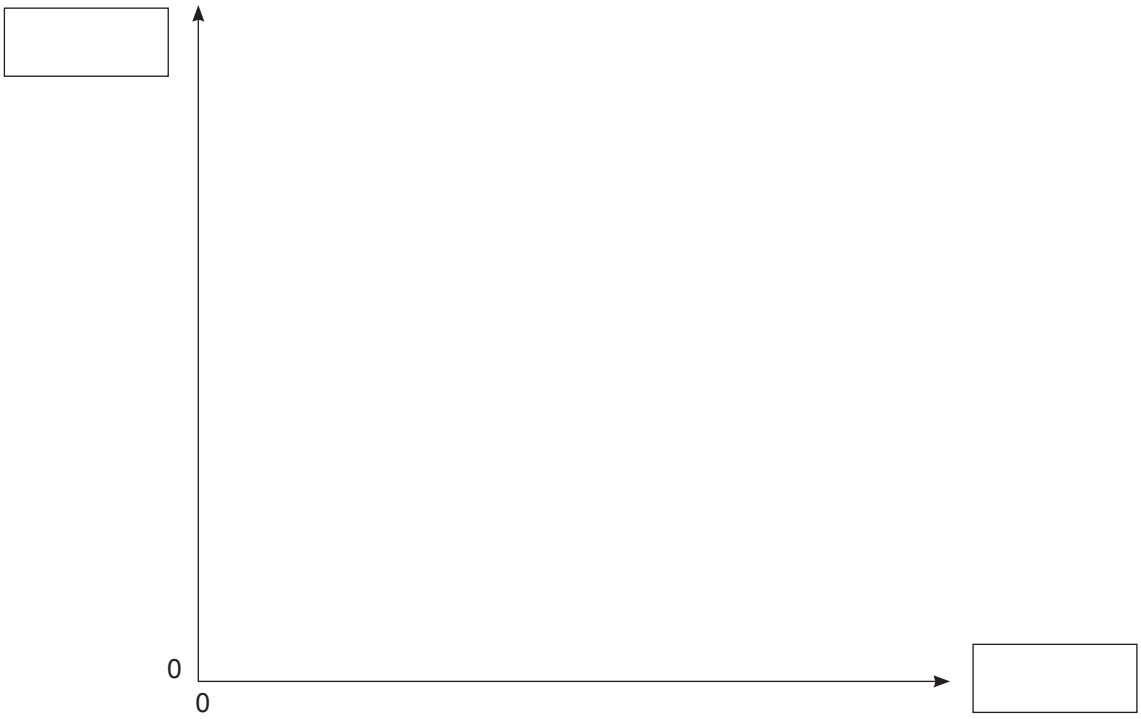

Fig. 1.2

[2]

(ii) Explain fully how you would use your graph to obtain a **reliable** value for the time constant of the circuit.

_____

_____

_____

_____

_____

_____ [3]

[Turn over

2 **(a)** State Newton's law of universal gravitation in words.

_____

_____

_____ [3]

(b) **(i)** CloudSat is a satellite orbiting Earth. It was launched by NASA in April 2006 to study the vertical structure of clouds and quantify their ice and water content.

Use the information in **Table 2.1** to calculate the orbital height h of CloudSat above the Earth's surface.

Table 2.1

Mass of Earth / kg	5.98×10^{24}
Radius of Earth / km	6.37×10^{3}
Gravitational field strength at orbital height h / N kg^{-1}	7.97

Orbital height h = _____ m [4]

(ii) Calculate the orbital period of CloudSat at this height.
Give your answer in hours.

Orbital period = _____ hours [6]

(iii) State, giving a reason, if CloudSat is a geostationary satellite.

_____

_____ [1]

3 The Standard Model of particle physics is a theory concerning the four fundamental forces in nature and is used to classify all known subatomic particles that exist.

(a) (i) Complete **Table 3.1** by naming the four fundamental forces in nature and their corresponding exchange particles.

Table 3.1

Fundamental force	Exchange particle

[4]

(ii) Subatomic particles can be classified as hadrons or leptons. State two differences between hadrons and leptons.

_____

_____ [2]

(iii) State the quark structure of a neutron.

_____ [1]

(iv) State the equations which describe β^- decay in terms of quarks. Include the virtual exchange particle emitted.

[2]

(b) Consider two appropriate conservation laws to determine whether the hadron reaction described in **Equation 3.1**, which produces a pi-minus meson, can occur. Show your working clearly in the space below.

$$n^0 + p^+ \longrightarrow n^0 + p^+ + p^+ + \pi^-$$ **Equation 3.1**

Can this reaction occur? _____ [3]

[Turn over

4 **(a)** A magnetic field exists around a conductor carrying an electric current. Sketch the shape of the field and indicate its direction due to the current carrying conductor shown in **Fig. 4.1**. The direction of the current is indicated by the arrow.

Fig. 4.1 [2]

(b) Two identical magnets, with opposite poles facing, are placed on a top pan balance. A wire is fixed so that it is parallel to the magnets and connected to a circuit as shown in **Fig. 4.2a**.

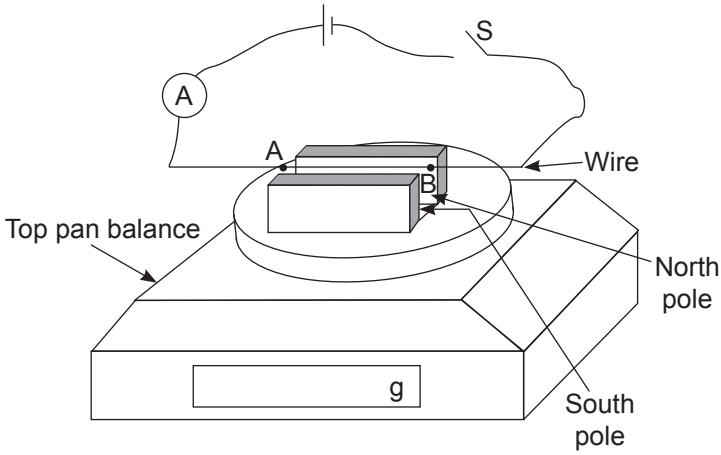

Fig. 4.2a

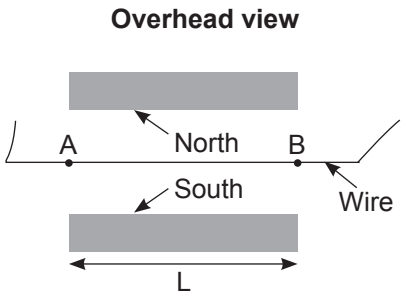

Fig. 4.2b

© Principal Examiner

On **Fig. 4.2a**, draw an arrow to show the direction of the force on the wire when switch S is closed. [1]

(c) Before the switch was closed, an initial balance reading was taken. The switch was then closed and the readings on the ammeter and balance recorded. These readings are shown in **Table 4.1**.

Table 4.1

I / A	m / g	F / N
0	76.83	
4.24	76.30	

(i) Complete the column headed **F / N** in **Table 4.1** to determine the magnitude of the force exerted on the wire for a current of 4.24 A. [2]

(ii) Determine the flux density of the magnets. The length of the magnets **L**, as shown in **Fig. 4.2b**, is 5.00 cm.

Flux density _____ T [3]

(iii) A voltmeter is placed in parallel across the wire between points A and B and reads 0.41 V when the current through the wire is 4.24 A. Calculate the resistivity of the wire if its diameter is 0.18 mm.

Resistivity = _____ Ω m [4]

[Turn over

5 Quality of written communication will be assessed in (a)(ii) of this question.

(a) **Fig. 5.1** is a simplified diagram of the National Grid. T1 and T2 are transformers.

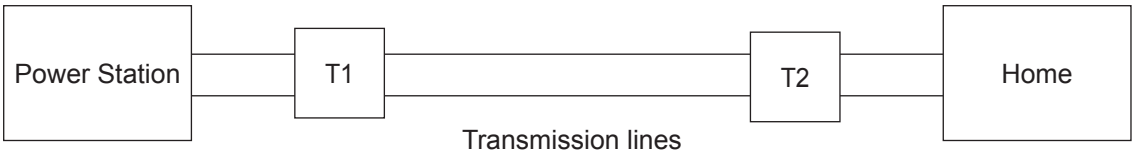

Fig. 5.1

(i) What type of transformers are T1 and T2?

Transformer T1: _____

Transformer T2: _____ [1]

Describe how a transformer is constructed.

_____

_____ [2]

(ii) Explain how transformer T2 works in order to produce an appropriate output voltage to our homes.

_____

_____

_____

_____

_____

_____

_____

_____

[6]

(b) Explain why high voltage transmission lines are necessary for energy to be transmitted across the country efficiently.

[2]

6 **(a)** Define **electric field strength**.

_____

_____ [2]

(b) **Fig. 6.1** shows two point charges Q_1 and Q_2 of +25μC and +15μC placed a distance of 2 m apart in a vacuum.

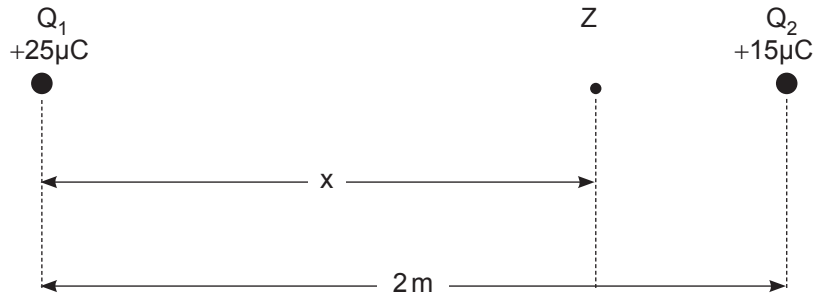

Fig. 6.1

(i) Calculate the magnitude and direction of the force exerted on the +25μC charge.

Force = _____ N

Direction = _____ [3]

(ii) The resultant electric field strength is zero at point Z, a distance x from Q_1.

Calculate the magnitude of x.

x = _____ m [4]

[Turn over

7 **Fig. 7.1** shows the basic structure of a synchrotron. A synchrotron is an accelerator used to progressively increase the speed of particles as they travel in a circular path of fixed radius.

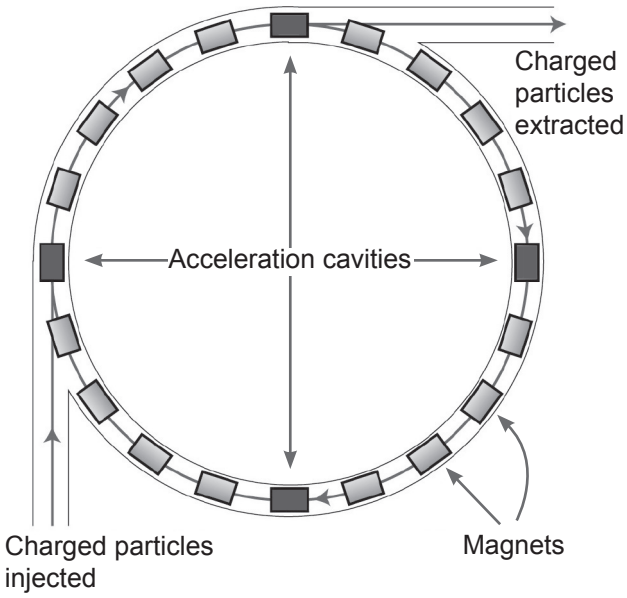

Fig. 7.1

© *Principal Examiner*

(a) **(i)** Describe how the circular path of fixed radius is achieved.

_____

_____ [2]

(ii) In this synchrotron the magnetic field is maintained using superconducting electromagnets.

Explain why superconductors are used to create the magnetic field and how the superconducting state is achieved.

_____

_____

_____

_____

_____

_____ [4]

(iii) The acceleration cavities are connected to a high frequency alternating voltage. The frequency of this voltage is increased as the speed of the particles increases. Why is this necessary?

_____

_____ [1]

(iv) The particles can be accelerated until their speed approaches the speed of light. Explain how the particles can continue to gain kinetic energy but no longer increase their speed.

_____

_____ [1]

(b) Protons are accelerated through the accelerator complex at CERN in various stages before being transferred to the synchrotron known as the Large Hadron Collider (LHC) with an initial energy of 0.45 TeV. The LHC has 8 cavities each with a potential difference of 2 MV which accelerate the protons.

How many orbits of the LHC must a proton complete to reach a final energy of 7 TeV?

Number of orbits = _____ [5]

BLANK PAGE

DO NOT WRITE ON THIS PAGE

(Questions continue overleaf)

8 **(a)** **(i)** State Faraday's law of electromagnetic induction.

_____

_____

_____ [1]

(ii) A circular coil of wire is placed with its plane perpendicular to a magnetic field. The magnetic flux ϕ through the coil changes with time t as shown in **Fig. 8.1**.

Draw a graph to show how the e.m.f. E induced in the coil changes with time on the blank set of axes in **Fig. 8.2**.

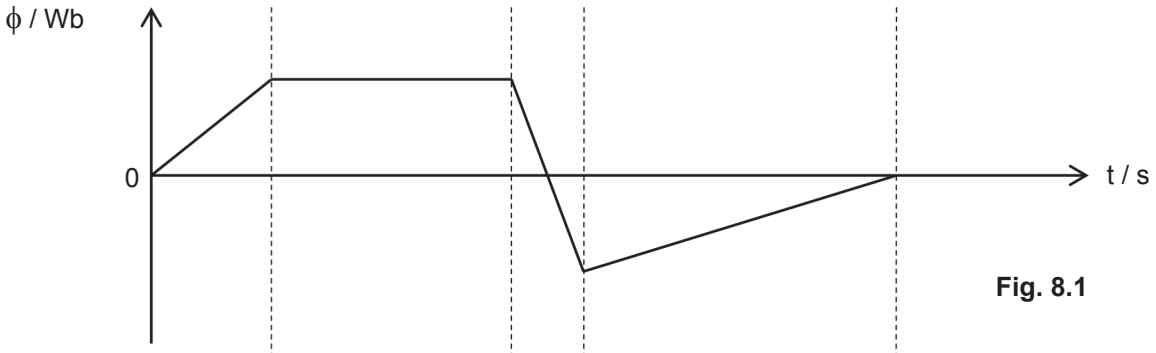

Fig. 8.1

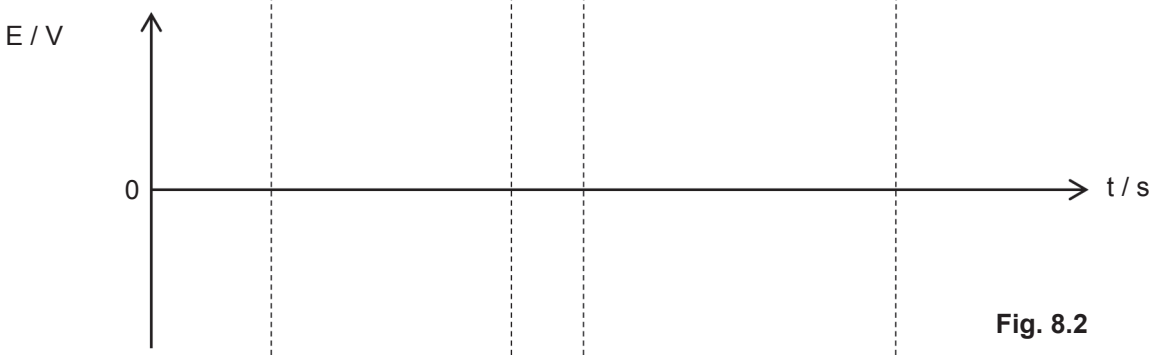

Fig. 8.2

[4]

BLANK PAGE

DO NOT WRITE ON THIS PAGE

(Questions continue overleaf)

(b) A coil of wire with 340 turns, each of area 65 cm^2, is placed within a uniform magnetic field of 55 mT. The coil is rotated through 500 revolutions per minute, inducing an alternating e.m.f. within the coils as shown in **Fig. 8.3**.

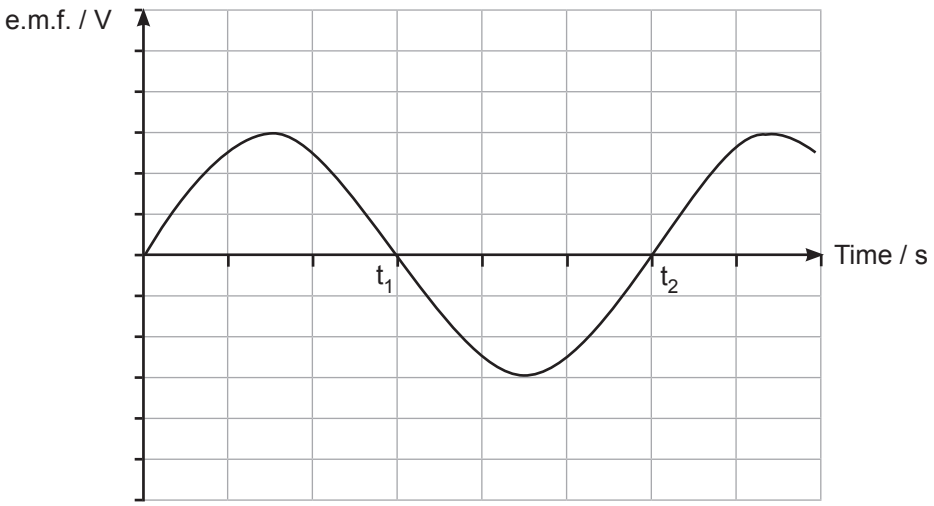

Fig. 8.3

(i) The e.m.f. induced in the coil is 0 V at times t_1 and t_2. By making reference to the position of the coil within the field explain why it is zero at these times.

_____

_____

_____

_____ [3]

(ii) Calculate the frequency of the alternating output.

Frequency = _____ Hz [1]

(iii) Calculate the maximum value of e.m.f.

Maximum e.m.f. = _____ V [2]

[Turn over

9 A beam of electrons travelling horizontally enters a uniform magnetic field midway between two horizontal metal plates, in a vacuum. The plates are 175 mm long and have a separation of 30 mm. The potential difference applied across the plates is increased to 1.5 kV so that the electron beam just emerges past the end of the lower plate as shown in **Fig. 9.1**.

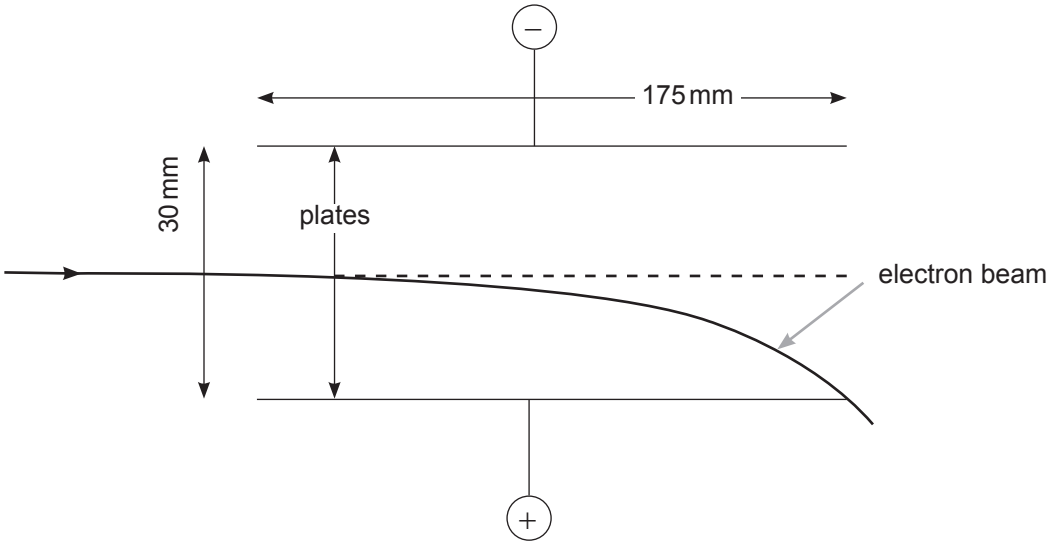

Fig. 9.1

(a) **(i)** Determine the electric field strength between the plates.

Electric field strength = _____ V m^{-1} [2]

(ii) Determine the force on the electron beam due to the electric field.

Force = _____ N [2]

(iii) Calculate the acceleration of an electron in the beam due to the electric field.

Acceleration = _____ m s^{-2} [1]

(b) **(i)** For this electron beam that just emerges past the end of the lower plate, calculate the time spent by the beam in the electric field.

Time = _____ s [3]

(ii) Calculate the initial speed of the electrons as they enter the field.

Initial speed = _____ m s^{-1} [1]

THIS IS THE END OF THE QUESTION PAPER

DO NOT WRITE ON THIS PAGE

For Examiner's use only	
Question Number	Marks
1	
2	
3	
4	
5	
6	
7	
8	
9	
Total Marks	

Examiner Number

Permission to reproduce all copyright material has been applied for.
In some cases, efforts to contact copyright holders may have been unsuccessful and CCEA will be happy to rectify any omissions of acknowledgement in future if notified.

236968

New Specification

Rewarding Learning

ADVANCED
General Certificate of Education

Physics

Assessment Units A2 1 and A2 2

[APH11/APH21]

DATA AND FORMULAE SHEET

FOR USE FROM 2018 ONWARDS

12159.02

Data and Formulae Sheet for A2 1 and A2 2

Values of constants

speed of light in a vacuum	$c = 3.00 \times 10^{8}$ m s^{-1}
permittivity of a vacuum	$\varepsilon_0 = 8.85 \times 10^{-12}$ F m^{-1}
	$\left(\frac{1}{4\pi\varepsilon_0} = 8.99 \times 10^{9}\ \text{F}^{-1}\ \text{m}\right)$
elementary charge	$e = 1.60 \times 10^{-19}$ C
the Planck constant	$h = 6.63 \times 10^{-34}$ J s
(unified) atomic mass unit	1 u $= 1.66 \times 10^{-27}$ kg
mass of electron	$m_e = 9.11 \times 10^{-31}$ kg
mass of proton	$m_p = 1.67 \times 10^{-27}$ kg
molar gas constant	$R = 8.31$ J K^{-1} mol^{-1}
the Avogadro constant	$N_A = 6.02 \times 10^{23}$ mol^{-1}
the Boltzmann constant	$k = 1.38 \times 10^{-23}$ J K^{-1}
gravitational constant	$G = 6.67 \times 10^{-11}$ N m^{2} kg^{-2}
acceleration of free fall on the Earth's surface	$g = 9.81$ m s^{-2}
electron volt	1 e$V = 1.60 \times 10^{-19}$ J
the Hubble constant	$H_0 \approx 2.4 \times 10^{-18}$ s^{-1}

Useful formulae

The following equations may be useful in answering some of the questions in the examination:

Mechanics

conservation of energy	$\frac{1}{2}mv^2 - \frac{1}{2}mu^2 = Fs$ for a constant force
Hooke's Law	$F = kx$ (spring constant k)
strain energy	$E = \frac{1}{2}\mathrm{Fx} = \frac{1}{2}kx^2$

Uniform circular motion

centripetal Force	$F = \frac{mv^2}{r}$

Simple harmonic motion

displacement	$x = A\cos\omega t$
simple pendulum	$T = 2\pi\sqrt{\frac{l}{g}}$
loaded spiral spring	$T = 2\pi\sqrt{\frac{m}{k}}$

Waves

two-source interference	$\lambda = \frac{ay}{d}$
diffraction grating	$d\sin\theta = n\lambda$

Thermal physics

average kinetic energy of a molecule	$\frac{1}{2} m \langle c^2 \rangle = \frac{3}{2} kT$
kinetic theory	$pV = \frac{1}{3} Nm \langle c^2 \rangle$
thermal energy	$Q = mc\Delta\theta$

Capacitors

capacitors in series	$\frac{1}{C} = \frac{1}{C_1} + \frac{1}{C_2} + \frac{1}{C_3}$
capacitors in parallel	$C = C_1 + C_2 + C_3$
time constant	$\tau = RC$
capacitor discharge	$Q = Q_0 e^{\frac{-t}{CR}}$
	or $V = V_0 e^{\frac{-t}{CR}}$
	or $I = I_0 e^{\frac{-t}{CR}}$

Light

lens formula	$\frac{1}{u} + \frac{1}{v} = \frac{1}{f}$

Electricity

terminal potential difference	$V = E - Ir$
	(e.m.f., E; Internal Resistance, r)
potential divider	$V_{out} = \frac{R_1 V_{in}}{R_1 + R_2}$
a.c. generator	$E = BAN\omega \sin\omega t$

Nuclear Physics

nuclear radius	$r = r_0 A^{\frac{1}{3}}$
radioactive decay	$A = -\lambda N, \quad A = A_0 e^{-\lambda t}$
half-life	$t_{\frac{1}{2}} = \frac{0.693}{\lambda}$

Particles and photons

Einstein's equation	$\frac{1}{2} m v_{max}^2 = hf - hf_0$
de Broglie equation	$\lambda = \frac{h}{p}$

Astronomy

red shift	$z = \frac{\Delta\lambda}{\lambda}$
recession speed	$z = \frac{v}{c}$
Hubble's law	$v = H_0 d$