AQA

Please write clearly in block capitals.

Centre number | | | | | | Candidate number | | | | |

Surname _____

Forename(s) _____

Candidate signature _____
I declare this is my own work.

GCSE
PHYSICS

F

Foundation Tier Paper 1

Time allowed: 1 hour 45 minutes

Materials
For this paper you must have:
- a ruler
- a scientific calculator
- the Physics Equations Sheet (enclosed).

Instructions
- Use black ink or black ball-point pen. Pencil should only be used for drawing.
- Fill in the boxes at the top of this page.
- Answer **all** questions in the spaces provided.
- Do not write outside the box around each page or on blank pages.
- If you need extra space for your answer(s), use the lined pages at the end of this book. Write the question number against your answer(s).
- Do all rough work in this book. Cross through any work you do not want to be marked.
- In all calculations, show clearly how you work out your answer.

Information
- The maximum mark for this paper is 100.
- The marks for questions are shown in brackets.
- You are expected to use a calculator where appropriate.
- You are reminded of the need for good English and clear presentation in your answers.

For Examiner's Use	
Question	Mark
1	
2	
3	
4	
5	
6	
7	
8	
9	
10	
11	
TOTAL	

Do not write outside the box

Answer **all** questions in the spaces provided.

0 1 . 1 A student investigated the three states of matter.

The arrangement of particles in the three states of matter are different.

Draw **one** line from each particle arrangement to the state of matter.

[2 marks]

Particle arrangement	**State of matter**
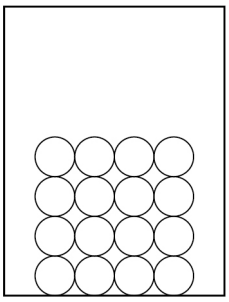	Solid
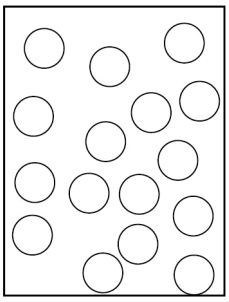	Liquid
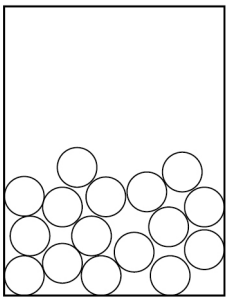	Gas

Do not write outside the box

A large lump of ice was heated and changed state.

Figure 1 shows how the temperature varied with time.

Figure 1

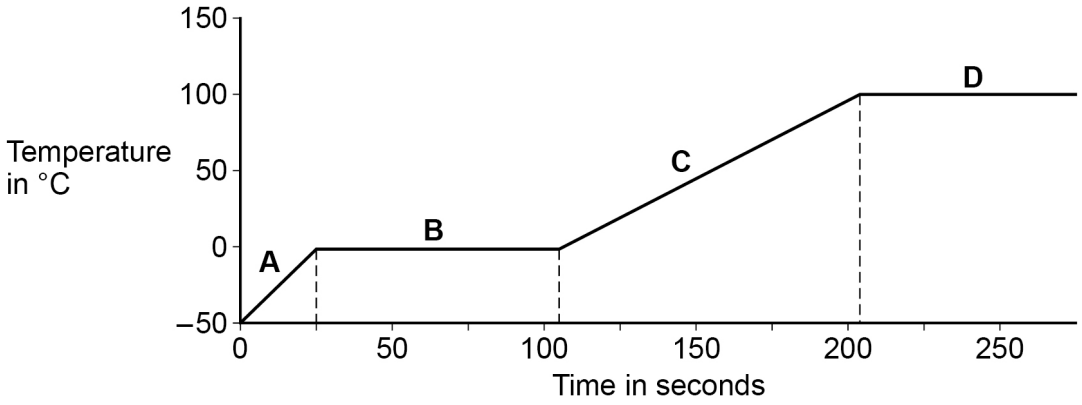

0 1 . 2 Which part of **Figure 1** shows when the ice was melting?

[1 mark]

Tick (✓) **one** box.

A ☐ **B** ☐ **C** ☐ **D** ☐

0 1 . 3 Which part of **Figure 1** shows when the water was boiling?

[1 mark]

Tick (✓) **one** box.

A ☐ **B** ☐ **C** ☐ **D** ☐

Question 1 continues on the next page

Do not write outside the box

0 1 . 4 Which property of the water particles changes as the temperature of the water increases?

[1 mark]

Tick (✓) **one** box.

The kinetic energy of the particles ☐

The mass of each particle ☐

The number of particles ☐

0 1 . 5 Calculate the thermal energy needed to melt 0.250 kg of ice at 0 °C.

specific latent heat of fusion of water = 334 000 J/kg

Use the equation:

thermal energy = mass × specific latent heat

[2 marks]

_____

_____

_____

Thermal energy = _____ J

Do not write outside the box

0 1 . 6 Complete the sentence.

Choose the answer from the box.

[1 mark]

condenses	**evaporates**	**ionises**	**sublimates**

A substance is heated and changes directly from a solid to a gas.

The substance _____ .

8

Turn over for the next question

Do not write outside the box

0 2 **Figure 2** shows part of the National Grid linking a power station to consumers.

Figure 2

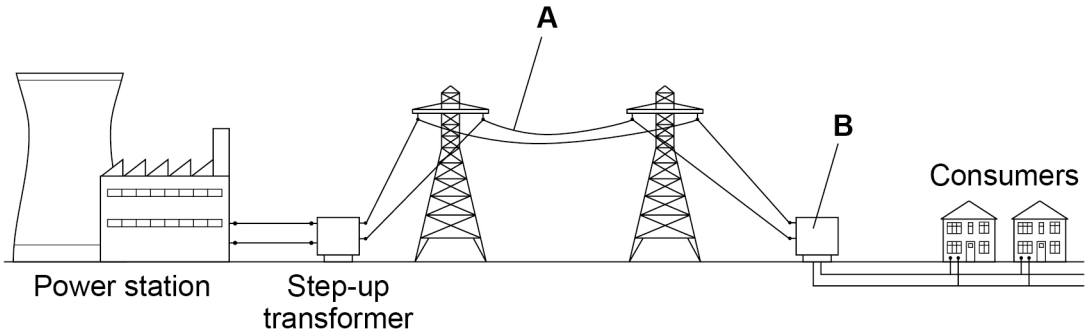

0 2 . 1 Name the parts of **Figure 2** labelled **A** and **B**.

[2 marks]

A _____

B _____

0 2 . 2 Electricity is transmitted through **A** at a very high potential difference.

What is the advantage of transmitting electricity at a very high potential difference?

[1 mark]

Tick (✓) **one** box.

A high potential difference is safer for consumers. ☐

Less thermal energy is transferred to the surroundings. ☐

Power transmission is faster. ☐

Do not write outside the box

0 2 . 3 The power station generates electricity at a potential difference of 25 000 V.

The energy transferred by the power station in one second is 500 000 000 J.

Calculate the charge flow from the power station in one second.

Use the equation:

$$\text{charge flow} = \frac{\text{energy}}{\text{potential difference}}$$

[2 marks]

Charge flow in one second = _____ C

Question 2 continues on the next page

Do not write outside the box

The electricity supply to a house has a potential difference of 230 V.

Table 1 shows the current in some appliances in the house.

Table 1

Appliance	**Current in amps**
Dishwasher	6.50
DVD player	0.10
Lamp	0.40
TV	0.20

0 2 . 4 Calculate the total power of all the appliances in **Table 1**.

Use the equation:

power = potential difference × current

[3 marks]

_____

_____

_____

_____

_____

Total power = _____ W

Do not write outside the box

0 2 . 5 Each appliance in **Table 1** is switched on for 2 hours.

Which appliance will transfer the most energy?

Give a reason for your answer.

[2 marks]

Appliance _____

Reason _____

_____

_____

0 2 . 6 The average energy transferred from the National Grid every second for each person in the UK is 600 J.

There are 32 000 000 seconds in one year.

Calculate the average energy transferred each year from the National Grid for each person in the UK.

[2 marks]

_____

_____

_____

Average energy transferred = _____ J

12

Turn over for the next question

Do not write outside the box

0 3 A student investigated the density of different fruits.

To determine the density of each fruit, the student measured the volume of each fruit.

Figure 3 shows the equipment the student could have used.

Figure 3

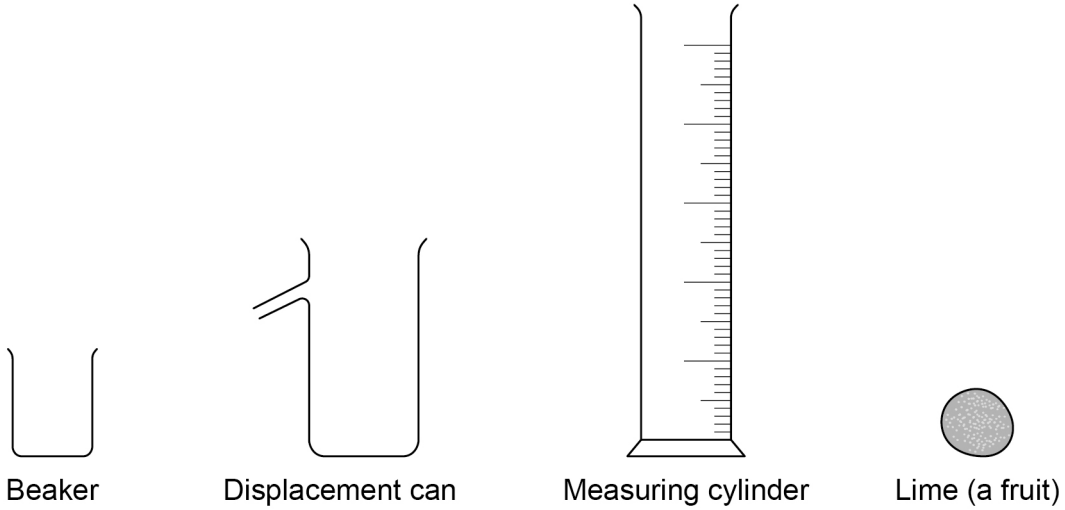

0 3 . 1 Describe a method the student could have used to measure the volume of the lime.

[4 marks]

Do not write outside the box

0 3 . 2 The student measured the volume of each fruit three times and then calculated a mean value.

The three measurements for a grape were

2.1 cm^3 2.1 cm^3 2.4 cm^3

Calculate the mean value.

[2 marks]

_____

_____

_____

Mean value = _____ cm^3

0 3 . 3 What are the advantages of taking three measurements and calculating a mean value?

[2 marks]

Tick (✓) **two** boxes.

Allows anomalous results to be identified and ignored. ☐

Improves the resolution of the volume measurement. ☐

Increases the precision of the measured volumes. ☐

Reduces the effect of random errors when using the equipment. ☐

Stops all types of error when using the equipment. ☐

Question 3 continues on the next page

Do not write outside the box

0 3 . 4 The mass of an apple was 84.0 g.

The volume of the apple was 120 cm^3.

Calculate the density of the apple.

Give your answer in g/cm^3.

Use the equation:

$$\text{density} = \frac{\text{mass}}{\text{volume}}$$

[2 marks]

Density = _____ g/cm^3

10

Do not write outside the box

Turn over for the next question

DO NOT WRITE ON THIS PAGE
ANSWER IN THE SPACES PROVIDED

Do not write outside the box

0 4 A student investigated how the current in a circuit varied with the number of lamps connected in parallel in the circuit.

Figure 4 shows the circuit with three identical lamps connected in parallel.

Figure 4

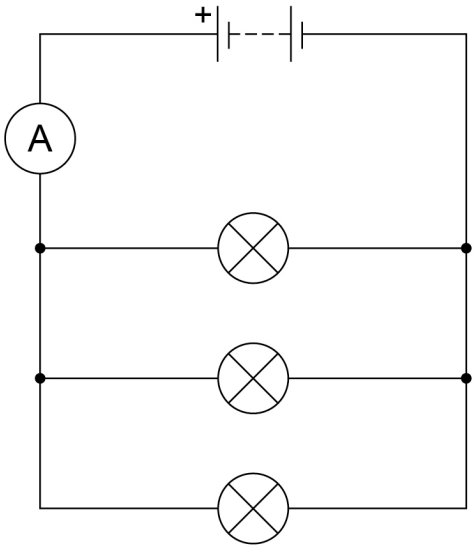

Figure 5 shows the results.

Figure 5

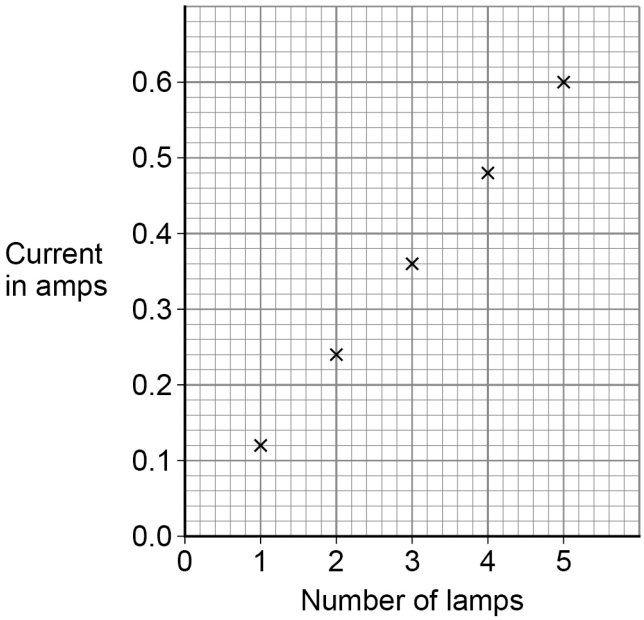

Do not write outside the box

0 4 . 1 Complete the sentences.

Choose answers from the box.

Each answer can be used once, more than once or not at all.

decreased	**stayed the same**	**increased**

[3 marks]

As the number of lamps increased, the current _____.

As the number of lamps increased, the total resistance of the circuit _____.

As the number of lamps increased, the potential difference across the battery _____.

0 4 . 2 When there were three lamps in the circuit the ammeter reading kept changing between 0.35 A and 0.36 A.

What type of error would this lead to?

[1 mark]

Tick (✓) **one** box.

Random error ☐

Systematic error ☐

Zero error ☐

Question 4 continues on the next page

Do not write outside the box

Figure 6 shows a circuit with five ammeters and three identical lamps.

Figure 6

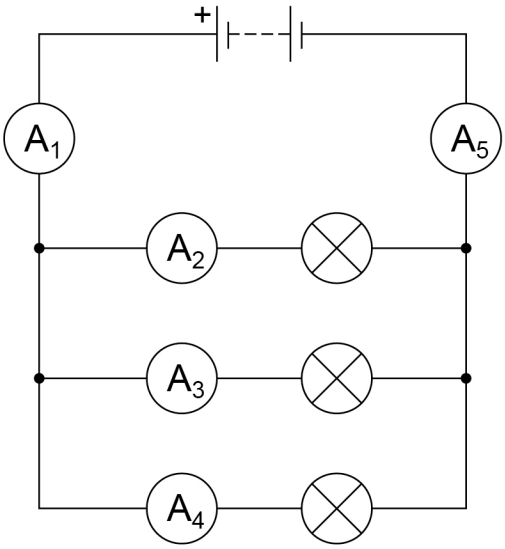

0 4 . 3 Complete **Table 2** to show the readings on ammeters A_2 and A_5.

[2 marks]

Table 2

Ammeter	**A_1**	**A_2**	**A_3**	**A_4**	**A_5**
Current in amps	0.36		0.12	0.12	

Do not write outside the box

0 4 . 4 The resistance of one lamp is 15 Ω.

The current in the lamp is 0.12 A.

Calculate the power output of the lamp.

Use the equation:

$$\text{power} = (\text{current})^2 \times \text{resistance}$$

[2 marks]

Power = _____ W

8

Turn over for the next question

Do not write outside the box

There are no questions printed on this page

DO NOT WRITE ON THIS PAGE
ANSWER IN THE SPACES PROVIDED

Do not write outside the box

0 5 Atoms of different elements have different properties.

0 5 . 1 Which of the following is the same for all atoms of the same element?

[1 mark]

Tick (✓) **one** box.

Atomic number ☐

Mass number ☐

Neutron number ☐

0 5 . 2 Which of the following is different for isotopes of the same element?

[1 mark]

Tick (✓) **one** box.

Number of electrons ☐

Number of neutrons ☐

Number of protons ☐

Question 5 continues on the next page

Do not write outside the box

0 5 . 3 A nucleus emits radiation.

Figure 7 shows how the mass number and the atomic number change.

The nucleus is labelled **D**.

Figure 7

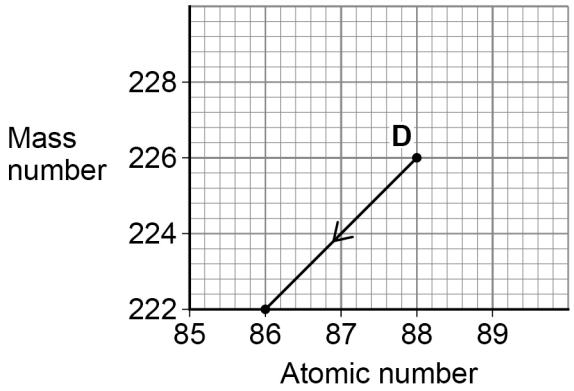

Which type of radiation is emitted when nucleus **D** decays?

[1 mark]

Tick (✓) **one** box.

Alpha ☐

Beta ☐

Neutron ☐

Do not write outside the box

0 5 . 4 Nucleus **E** also emits radiation.

Figure 8 shows how the mass number and the atomic number change for nucleus **E**.

Figure 8

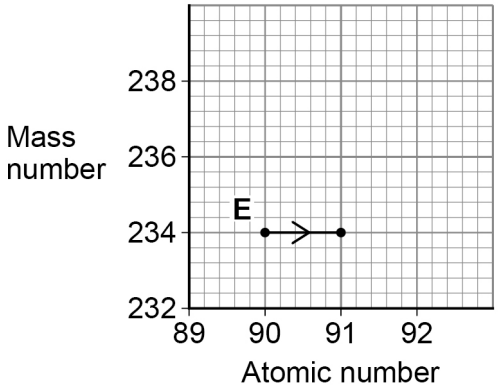

Which type of radiation is emitted when nucleus **E** decays?

[1 mark]

Tick (✓) **one** box.

Alpha ☐

Beta ☐

Neutron ☐

Question 5 continues on the next page

Do not write outside the box

Beta radiation can be used to monitor the thickness of paper during production.

Figure 9 shows how the radiation is used.

Figure 9

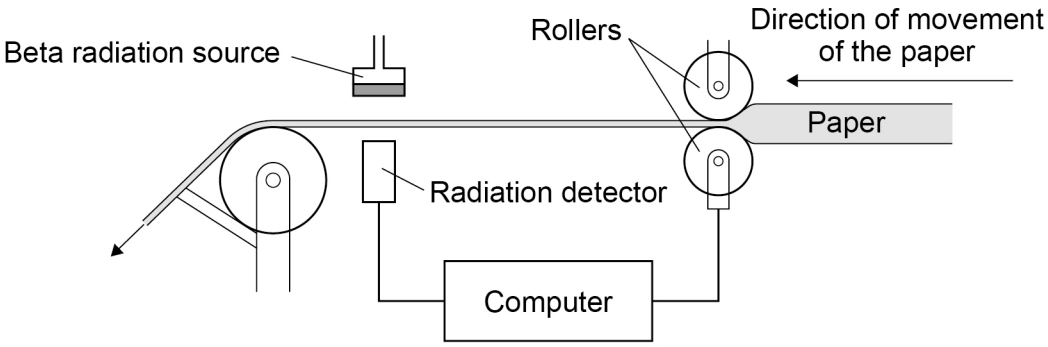

The computer uses information from the radiation detector to change the size of the gap between the rollers.

0 5 . 5 Complete the sentences.

Choose answers from the box.

Each answer can be used once, more than once or not at all.

decrease	**stay the same**	**increase**

The thickness of the paper between the beta source and the detector increases.

[2 marks]

The reading on the detector will _____.

This is because the amount of radiation absorbed by the paper

will _____.

Do not write outside the box

0 5 . 6 All radioactive elements have a half-life.

What is meant by 'half-life'?

[1 mark]

Tick (✓) **one** box.

The time it takes for all the nuclei in a radioactive sample to split in half. ☐

The time it takes for the count rate of a radioactive sample to halve. ☐

The time it takes for the radiation to travel half of its range in air. ☐

0 5 . 7 Why should the radiation source used in **Figure 9** have a long half-life?

[1 mark]

Tick (✓) **one** box.

So the activity of the source is approximately constant. ☐

So the amount of radiation decreases quickly. ☐

So the radiation has a long range in air. ☐

8

Turn over for the next question

Do not write outside the box

0 6 **Figure 10** shows a house with a solar power system.

The solar cells generate electricity.

When the electricity generated by the solar cells is not needed, the energy is stored in a large battery.

Figure 10

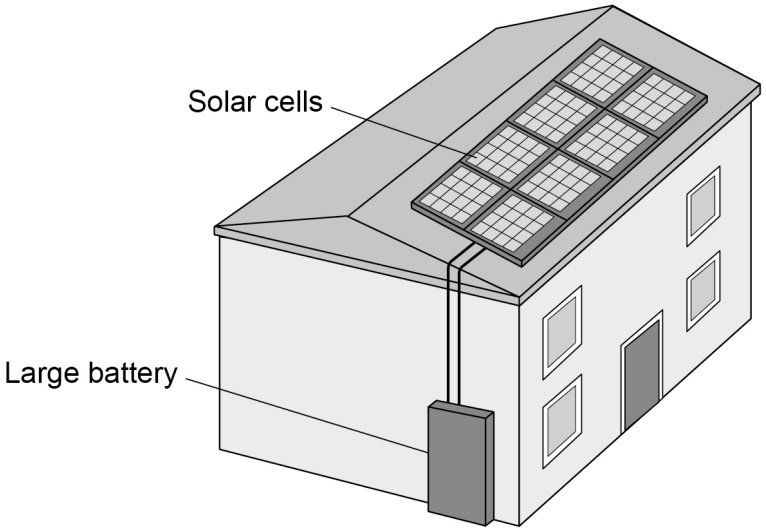

0 6 . 1 The solar cells on the roof of the house always face in the same direction.

Explain **one** disadvantage caused by the solar cells only facing in one direction.

[2 marks]

Do not write outside the box

0 6 . 2 The mean current from the solar cells to the battery is 3.5 A.

Calculate the charge flow from the solar cells to the battery in 3600 seconds.

Use the equation:

charge flow = current × time

[2 marks]

Charge flow = _____ C

0 6 . 3 Write down the equation which links efficiency, total power input and useful power output.

[1 mark]

0 6 . 4 At one time in the day, the total power input to the solar cells was 7500 W.

The efficiency of the solar cells was 0.16

Calculate the useful power output of the solar cells.

[3 marks]

Useful power output = _____ W

Question 6 continues on the next page

Do not write outside the box

0 6 . 5 The wasted energy that is **not** usefully transferred by the solar cells is dissipated.

What happens to energy that has been dissipated?

[1 mark]

Tick (✓) **one** box.

The energy becomes less useful. ☐

The energy is destroyed. ☐

The energy is used to generate electricity. ☐

0 6 . 6 Why is it unlikely that all the UK's electricity needs could be met by solar power systems?

[1 mark]

Tick (✓) **one** box.

A very large area would need to be covered with solar cells. ☐

Solar power is a non-renewable energy resource. ☐

The efficiency of solar cells is too high. ☐

10

Do not write outside the box

Turn over for the next question

DO NOT WRITE ON THIS PAGE
ANSWER IN THE SPACES PROVIDED

Do not write outside the box

0 7 **Figure 11** shows a diver about to dive off a diving board.

Figure 11

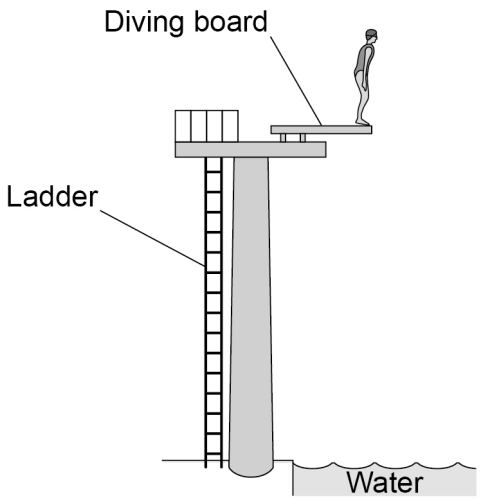

0 7 . 1 Complete the sentences.

Choose answers from the box.

[2 marks]

elastic potential	**gravitational potential**	**kinetic**	**nuclear**

As the diver falls towards the water there is a decrease in

her _____ energy.

As the diver falls towards the water there is an increase in

her _____ energy.

Do not write outside the box

0 7 . 2 Write down the equation which links kinetic energy (E_k), mass (m) and speed (v).

[1 mark]

_____

0 7 . 3 At the instant the diver hits the water, the kinetic energy of the diver is 5040 J.

The speed of the diver is 12 m/s.

Calculate the mass of the diver.

[3 marks]

_____

_____

_____

_____

Mass = _____ kg

0 7 . 4 Most of the kinetic energy of the diver is transferred to the water.

How does this affect the thermal energy of the water?

[1 mark]

Tick (✓) **one** box.

The thermal energy decreases. ☐

The thermal energy stays the same. ☐

The thermal energy increases. ☐

7

Turn over for the next question

Do not write outside the box

0 8 A teacher demonstrated the relationship between the pressure in a gas and the volume of the gas.

Figure 12 shows the equipment used.

Figure 12

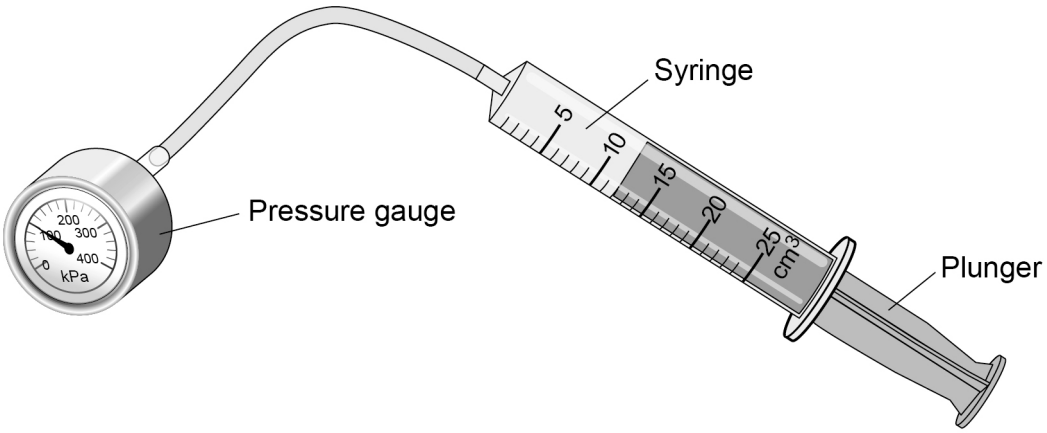

0 8 . 1 What is the range of the syringe?

[1 mark]

Tick (✓) **one** box.

From 0 to 1 cm^3 ☐

From 0 to 5 cm^3 ☐

From 0 to 25 cm^3 ☐

0 8 . 2 The relationship between the pressure and volume of a gas is given by the equation:

pressure × volume = constant

Complete the sentence.

[1 mark]

For this equation to apply, both the mass of gas and the _____

of the gas must stay the same.

Do not write outside the box

0 8 . 3 The initial volume of the gas in the syringe was 12 cm^3.

The initial pressure of the gas in the syringe was 101 000 Pa.

Calculate the constant in the equation below.

pressure × volume = constant

[2 marks]

Constant = _____ Pa cm^3

0 8 . 4 The teacher pulled the plunger slowly outwards and the gas expanded.

The new volume of the gas was 24 cm^3.

Calculate the new pressure in the gas.

The constant has the same value as in Question **08.3**

[3 marks]

New pressure = _____ Pa

Question 8 continues on the next page

Do not write outside the box

0 8 . 5 Which change occurs when the plunger is pulled slowly outwards?

[1 mark]

Tick (✓) **one** box.

The gas particles stop moving. ☐

There are more frequent collisions between the gas particles. ☐

There is more space between the gas particles. ☐

8

Do not write outside the box

0 9 **Figure 13** shows an electric car being recharged.

Figure 13

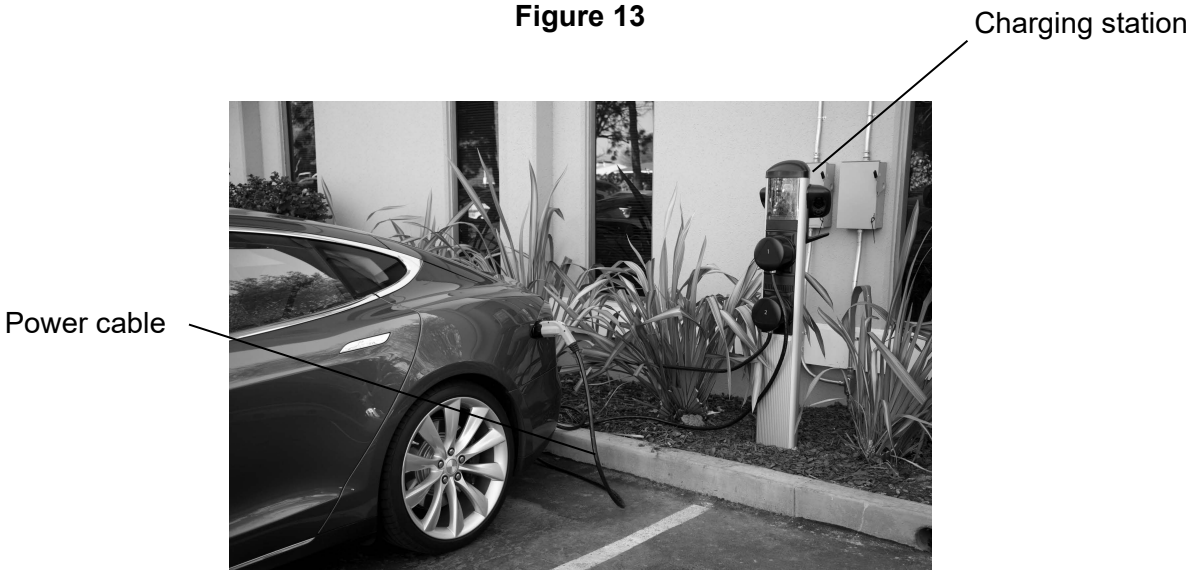

0 9 . 1 The charging station applies a direct potential difference across the battery of the car.

What does 'direct potential difference' mean?

[1 mark]

_____

_____

_____

Question 9 continues on the next page

Do not write outside the box

0 9 . 2 Which equation links energy transferred (E), power (P) and time (t)?

[1 mark]

Tick (✓) **one** box.

energy transferred = $\frac{\text{power}}{\text{time}}$ ☐

energy transferred = $\frac{\text{time}}{\text{power}}$ ☐

energy transferred = power × time ☐

energy transferred = power^2 × time ☐

0 9 . 3 The battery in the electric car can store 162 000 000 J of energy.

The charging station has a power output of 7200 W.

Calculate the time taken to fully recharge the battery from zero.

[3 marks]

_____

_____

_____

_____

_____

Time taken = _____ s

Do not write outside the box

0 9 . 4 Which equation links current (I), potential difference (V) and resistance (R)?

[1 mark]

Tick (✓) **one** box.

$I = V \times R$ ☐

$I = V^2 \times R$ ☐

$R = I \times V$ ☐

$V = I \times R$ ☐

0 9 . 5 The potential difference across the battery is 480 V.

There is a current of 15 A in the circuit connecting the battery to the motor of the electric car.

Calculate the resistance of the motor.

[3 marks]

Resistance = _____ Ω

Question 9 continues on the next page

Do not write outside the box

0 9 . 6 Different charging systems use different electrical currents.

- Charging system **A** has a current of 13 A.
- Charging system **B** has a current of 26 A.
- The potential difference of both charging systems is 230 V.

How does the time taken to recharge a battery using charging system **A** compare with the time taken using charging system **B**?

[1 mark]

Tick (✓) **one** box.

Time taken using system **A** is half the time of system **B** ☐

Time taken using system **A** is the same as system **B** ☐

Time taken using system **A** is double the time of system **B** ☐

10

Do not write outside the box

Turn over for the next question

DO NOT WRITE ON THIS PAGE
ANSWER IN THE SPACES PROVIDED

Do not write outside the box

1 0 Energy from the Sun is released by nuclear fusion.

1 0 . 1 Complete the sentences.

[2 marks]

Nuclear fusion is the joining together of _____.

During nuclear fusion the total mass of the particles _____.

1 0 . 2 Nuclear fusion of deuterium is difficult to achieve on Earth because of the high temperature needed.

Electricity is used to increase the temperature of 4.0 g of deuterium by 50 000 000 °C.

specific heat capacity of deuterium = 5200 J/kg °C

Calculate the energy needed to increase the temperature of the deuterium by 50 000 000 °C.

Use the Physics Equations Sheet.

[3 marks]

_____

_____

_____

_____

_____

Energy = _____ J

Do not write outside the box

1 0 . 3 The idea of obtaining power from nuclear fusion was investigated using models.

The models were tested before starting to build the first commercial nuclear fusion power station.

Suggest **two** reasons why models were tested.

[2 marks]

1 _____

_____

_____

2 _____

_____

_____

1 0 . 4 Generating electricity using nuclear fusion will have fewer environmental effects than generating electricity using fossil fuels.

Explain **one** environmental effect of generating electricity using fossil fuels.

[2 marks]

_____

_____

_____

_____

_____

9

Turn over for the next question

Do not write outside the box

1 1 Student **A** investigated how the current in resistor **R** at constant temperature varied with the potential difference across the resistor.

Student **A** recorded both positive and negative values of current.

Figure 14 shows the circuit Student **A** used.

Figure 14

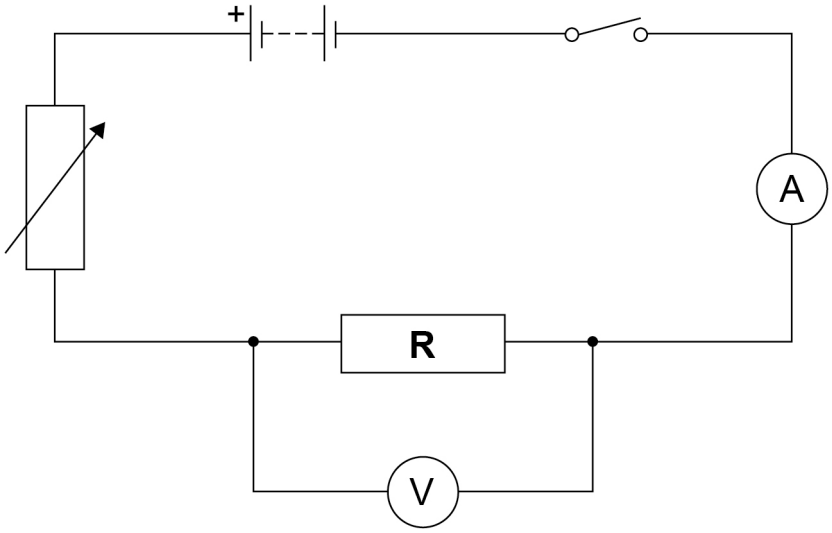

1 1 . 1 Describe a method that Student **A** could use for this investigation.

[6 marks]

Do not write outside the box

1 1 . 2 Student **B** repeated the investigation.

During Student **B**'s investigation the temperature of resistor **R** increased.

Explain how the increased temperature of resistor **R** would have affected Student **B**'s results.

[2 marks]

Question 11 continues on the next page

Do not write outside the box

Figure 15 shows the scale on a moving coil ammeter at one time in the investigation.

Figure 15

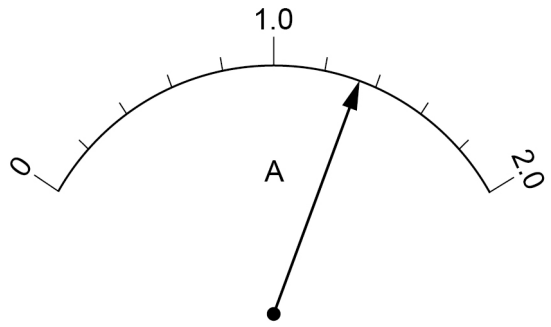

1 1 . 3 What is the resolution of the moving coil ammeter?

[1 mark]

Resolution = _____ A

Do not write outside the box

1 1 . 4 Student **B** replaced the moving coil ammeter with a digital ammeter.

Figure 16 shows the reading on the digital ammeter.

Figure 16

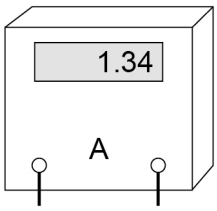

The digital ammeter has a higher resolution than the moving coil ammeter.

Give **one** other reason why it would have been better to use the digital ammeter throughout this investigation.

[1 mark]

_____

_____

_____

10

END OF QUESTIONS

Do not write outside the box

There are no questions printed on this page

DO NOT WRITE ON THIS PAGE
ANSWER IN THE SPACES PROVIDED

Do not write outside the box

Question number	**Additional page, if required.** **Write the question numbers in the left-hand margin.**

Do not write outside the box

Question number	**Additional page, if required.** **Write the question numbers in the left-hand margin.**

Do not write outside the box

Question number	**Additional page, if required.** **Write the question numbers in the left-hand margin.**

Do not write outside the box

There are no questions printed on this page

DO NOT WRITE ON THIS PAGE
ANSWER IN THE SPACES PROVIDED

Copyright information

For confidentiality purposes, all acknowledgements of third-party copyright material are published in a separate booklet. This booklet is published after each live examination series and is available for free download from www.aqa.org.uk.

Permission to reproduce all copyright material has been applied for. In some cases, efforts to contact copyright-holders may have been unsuccessful and AQA will be happy to rectify any omissions of acknowledgements. If you have any queries please contact the Copyright Team.

Copyright © 2021 AQA and its licensors. All rights reserved.