Please write clearly in block capitals.

Centre number | | | | | | Candidate number | | | | |

Surname _____

Forename(s) _____

Candidate signature _____
I declare this is my own work.

GCSE
PHYSICS

H

Higher Tier Paper 2

Friday 12 June 2020 Morning Time allowed: 1 hour 45 minutes

Materials
For this paper you must have:
- a ruler
- a scientific calculator
- a protractor
- the Physics Equations Sheet (enclosed).

Instructions
- Use black ink or black ball-point pen. Pencil should only be used for drawing.
- Fill in the boxes at the top of this page.
- Answer **all** questions in the spaces provided.
- Do not write outside the box around each page or on blank pages.
- If you need extra space for your answer(s), use the lined pages at the end of this book. Write the question number against your answer(s).
- Do all rough work in this book. Cross through any work you do not want to be marked.
- In all calculations, show clearly how you work out your answer.

Information
- The maximum mark for this paper is 100.
- The marks for questions are shown in brackets.
- You are expected to use a calculator where appropriate.
- You are reminded of the need for good English and clear presentation in your answers.

For Examiner's Use	
Question	Mark
1	
2	
3	
4	
5	
6	
7	
TOTAL	

Do not write outside the box

Answer **all** questions in the spaces provided.

0 1 A student investigated the acceleration of a trolley.

Figure 1 shows how the student set up the apparatus.

Figure 1

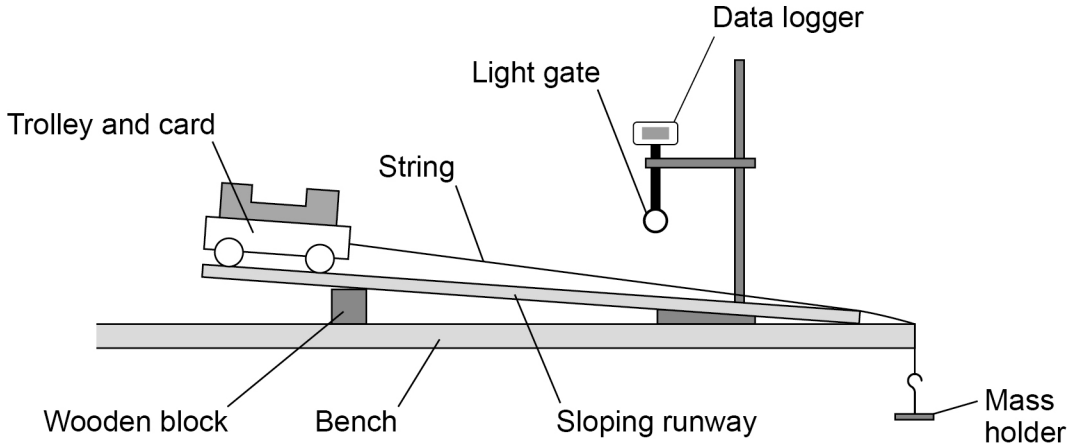

0 1 . 1 Before attaching the mass holder the student placed the trolley at the top of the runway. The trolley rolled down the runway without being pushed.

What change to the apparatus in **Figure 1** could be made to prevent the trolley from starting to roll down the runway?

[1 mark]

Tick (✓) **one** box.

Move the wooden block to the left. ☐

Shorten the length of the runway. ☐

Use a taller wooden block. ☐

0 1 . 2 The student attached the mass holder to the string.

The string rubbed along the edge of the bench as the mass holder fell to the floor.

Suggest what the student could do to prevent the string from rubbing.

[1 mark]

_____

_____

Do not write outside the box

The light gate and data logger were used to determine the acceleration of the trolley.

The student increased the resultant force on the trolley and recorded the acceleration of the trolley.

Table 1 shows the results.

Table 1

Resultant force in newtons	Acceleration in m/s^2
0.05	0.08
0.10	0.18
0.15	0.25
0.20	0.32
0.25	0.41

Figure 2 is an incomplete graph of the results.

Figure 2

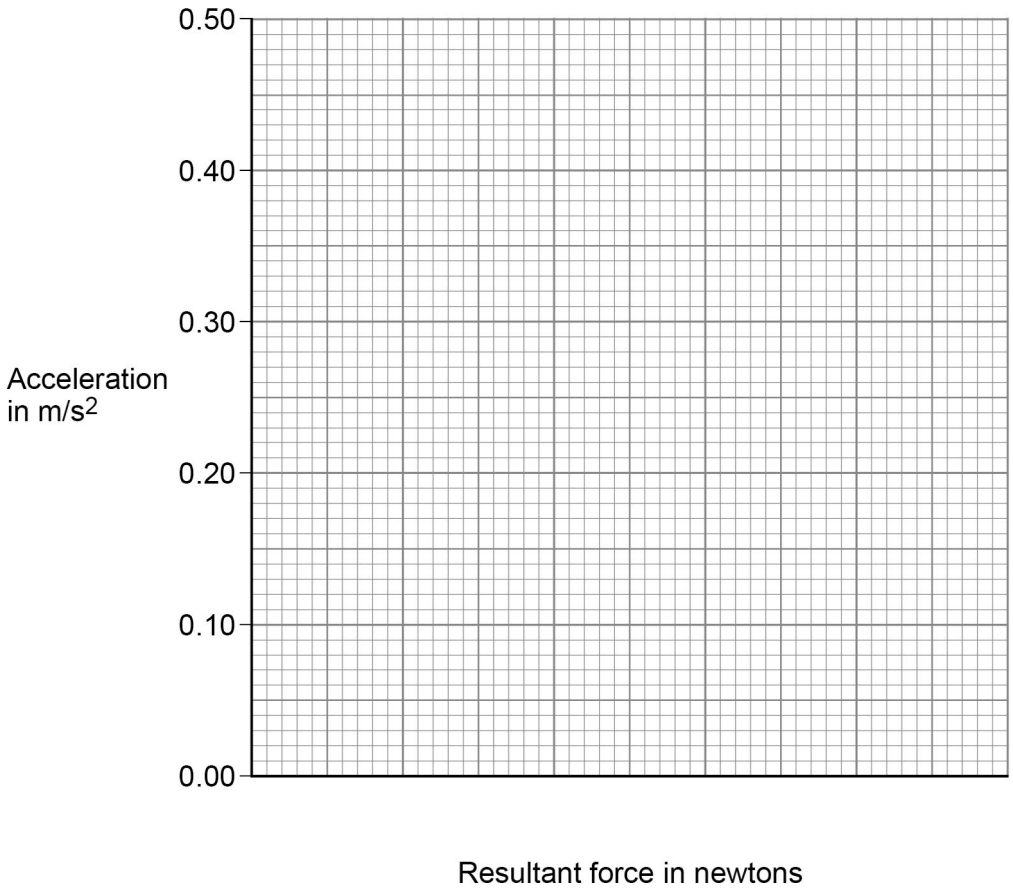

0 1 . 3 Complete **Figure 2**.

- Choose a suitable scale for the x-axis.
- Plot the results.
- Draw a line of best fit.

[4 marks]

Do not write outside the box

0 1 . 4 Describe the relationship between the resultant force on the trolley and the acceleration of the trolley.

[1 mark]

0 1 . 5 Describe how the investigation could be improved to reduce the effect of random errors.

[2 marks]

0 1 . 6 Write down the equation that links acceleration (a), mass (m) and resultant force (F).

[1 mark]

0 1 . 7 The resultant force on the trolley was 0.375 N.

The mass of the trolley was 0.60 kg.

Calculate the acceleration of the trolley.

Give your answer to 2 significant figures.

[4 marks]

Acceleration (2 significant figures) = _____ m/s^2

14

Do not write outside the box

Turn over for the next question

DO NOT WRITE ON THIS PAGE
ANSWER IN THE SPACES PROVIDED

Do not write outside the box

0 2 . 1 Complete the sentences.

[2 marks]

The Sun is a stable star. This is because the forces pulling inwards caused by

_____ are in equilibrium with the forces pushing outwards caused

by the energy released by nuclear _____.

0 2 . 2 Write down the equation that links distance travelled (s), speed (v) and time (t).

[1 mark]

_____

0 2 . 3 The mean distance between the Sun and the Earth is 1.5×10^{11} m.

Light travels at a speed of 3.0×10^{8} m/s.

Calculate the time taken for light from the Sun to reach the Earth.

[3 marks]

_____

_____

_____

_____

_____

Time = _____ s

Do not write outside the box

0 2 . 4 Some stars are much more massive than the Sun.

Describe the life cycle of stars much more massive than the Sun, including the formation of new elements.

[6 marks]

Question 2 continues on the next page

Do not write outside the box

0 2 . 5 Stars emit radiation with a range of wavelengths.

Which property of a star does the range of wavelengths depend on?

[1 mark]

Tick (✓) **one** box.

Density ☐

Mass ☐

Temperature ☐

Volume ☐

13

Do not write outside the box

0 3 A student investigated the refraction of light at the boundary between air and glass.

Figure 3 shows the ray box used.

Figure 3

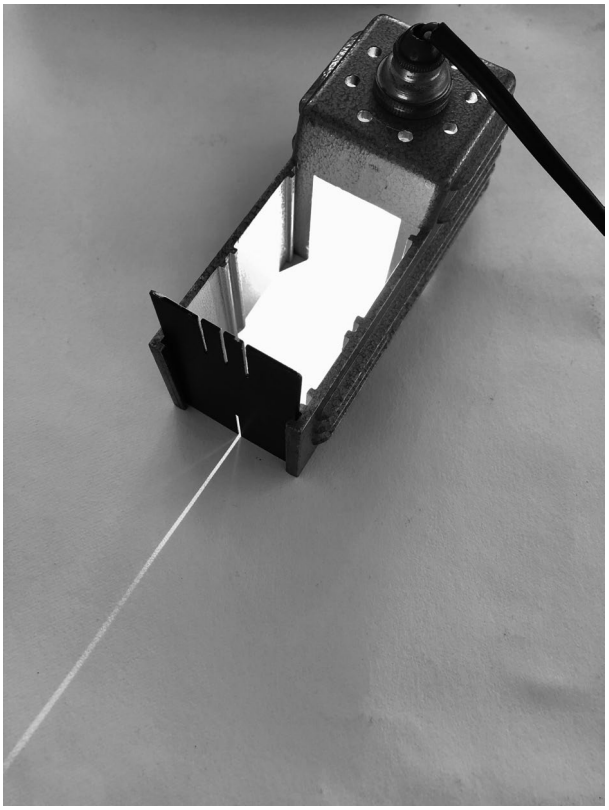

0 3 . 1 The ray of light from the ray box should be as narrow as possible.

Explain why using a wider ray would give less accurate results than using a narrower ray.

[2 marks]

_____

_____

_____

_____

Question 3 continues on the next page

Do not write outside the box

Figure 4 shows the results.

Figure 4

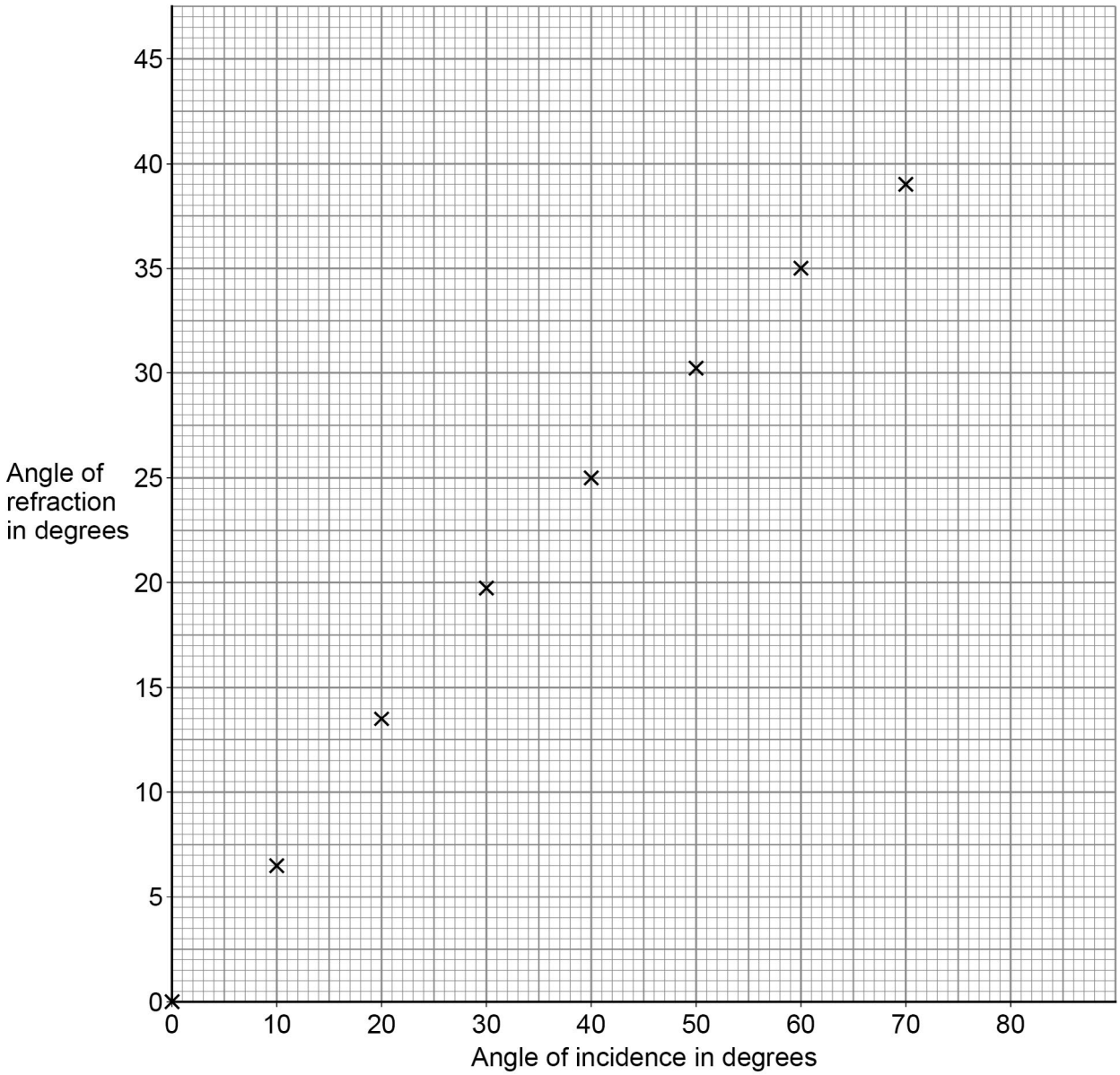

0 3 . 2 Estimate the angle of refraction when the angle of incidence is 80°.

Show on **Figure 4** how you obtained your answer.

[2 marks]

Angle of refraction = _____°

Do not write outside the box

0 3 . 3 Describe a method the student could have used to obtain the results shown in **Figure 4**.

[6 marks]

0 3 . 4 The student repeated each measurement three times.

When the angle of incidence was 40° the three measured values for the angle of refraction were

28° 25° 22°

Estimate the uncertainty in the angle of refraction when the angle of incidence was 40°.

Show how you determine your estimate.

[2 marks]

Uncertainty = ± _____ °

Do not write outside the box

0 3 . 5 What property of the light wave changes when it is refracted?

[1 mark]

Tick (✓) **one** box.

Colour ☐

Frequency ☐

Velocity ☐

13

Do not write outside the box

Turn over for the next question

DO NOT WRITE ON THIS PAGE
ANSWER IN THE SPACES PROVIDED

Do not write outside the box

0 4 A door is fitted with a security lens and a lock.

The security lens allows a person to see a visitor before opening the door.

The security lens is concave.

0 4 . 1 **Figure 5** is an incomplete ray diagram representing a visitor standing near the security lens.

Complete **Figure 5** to show how an image of the visitor is formed by the concave lens.

Draw an arrow to represent the image.

[3 marks]

Figure 5

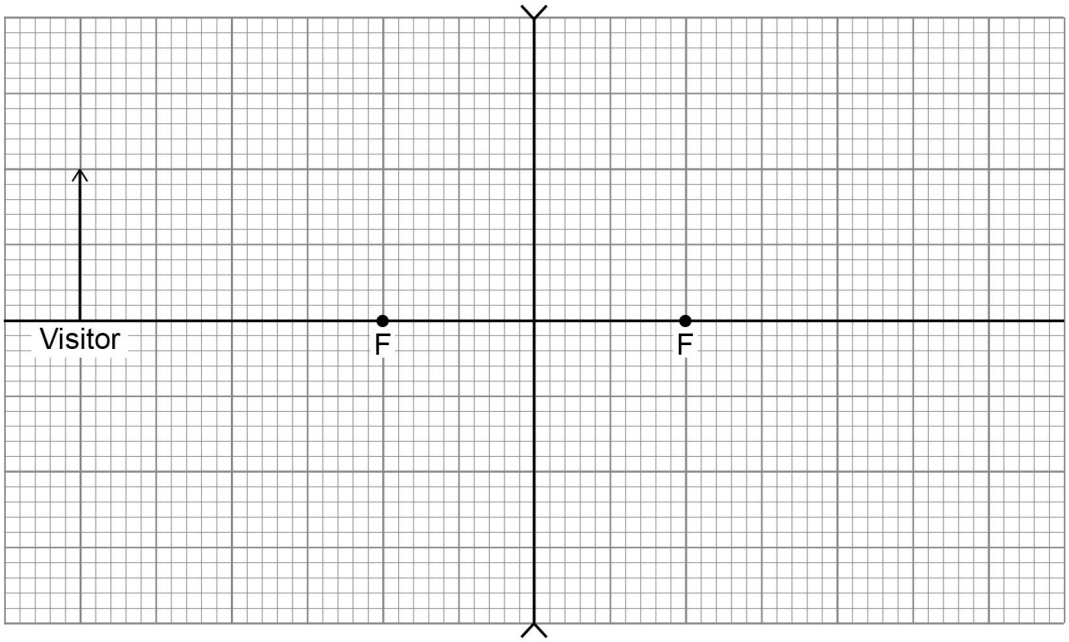

0 4 . 2 The visitor moves further away from the security lens in the door.

How does the size of the image change?

[1 mark]

Tick (✓) **one** box.

Decreases ☐

Increases ☐

Stays the same ☐

Do not write outside the box

Figure 6 shows a diagram of the lock. The door unlocks when the switch is closed.

Figure 6

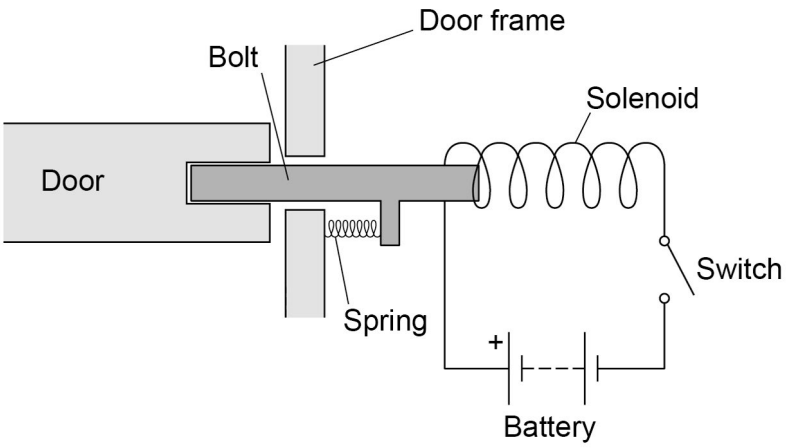

0 4 . 3 Which material should the bolt be made from?

[1 mark]

Tick (✓) **one** box.

Aluminium ☐

Brass ☐

Copper ☐

Iron ☐

0 4 . 4 Explain why the door unlocks when the switch is closed.

[3 marks]

_____

_____

_____

_____

_____

_____

Do not write outside the box

0 4 . 5 When the door unlocks, a force of 2.88 N is applied to the spring.

The spring extends by 1.50 cm.

Calculate the spring constant of the spring.

[4 marks]

Spring constant = _____ N/m

0 4 . 6 Give **two** ways the resultant force on the bolt could be increased.

[2 marks]

1 _____

2 _____

14

Do not write outside the box

Turn over for the next question

DO NOT WRITE ON THIS PAGE
ANSWER IN THE SPACES PROVIDED

Do not write outside the box

0 5 **Figure 7** shows two ice hockey players moving towards each other.

They collide and then move off together.

Figure 7

Before the collision

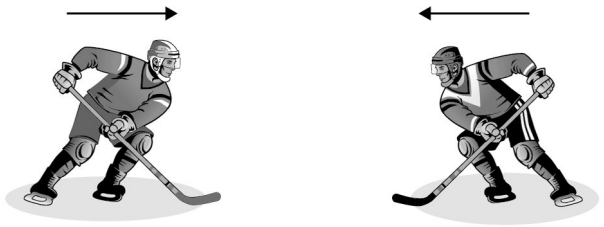

Player A	**Player B**
Mass = 78 kg	Mass = 91 kg
Velocity = +7.5 m/s	Velocity = –5.5 m/s

During the collision, the total momentum of the players is conserved.

0 5 . 1 What is meant by ‘momentum is conserved’?

[1 mark]

_____

_____

Do not write outside the box

0 5 . 2 Immediately after the collision the two players move together to the right.

Calculate the velocity of the two players immediately after the collision.

[4 marks]

Velocity = _____ m/s

0 5 . 3 The ice hockey players wear protective pads filled with foam.

Explain how the protective pads help to reduce injury when the players collide.

[3 marks]

8

Turn over for the next question

Do not write outside the box

0 6 **Figure 8** shows a student playing with a remote-controlled car.

Figure 8

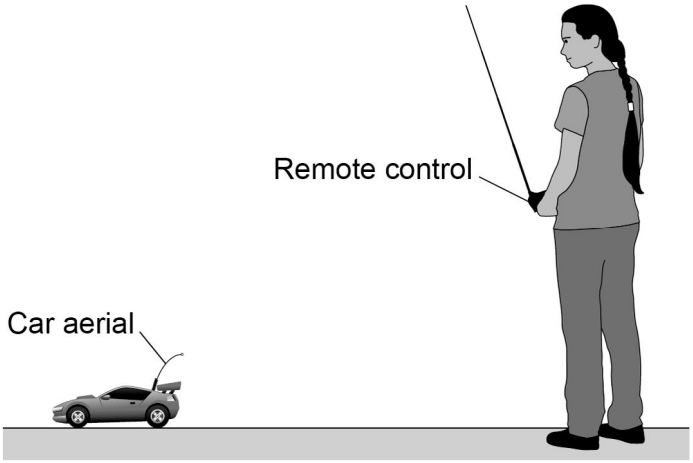

0 6 . 1 The remote control transmits radio waves to the car aerial.

The transmitted radio waves have a frequency of 320 MHz.

speed of radio waves = 3.0×10^8 m/s

Calculate the wavelength of the radio waves.

Give the unit.

[5 marks]

Wavelength = _____ Unit _____

Do not write outside the box

0 6 . 2 The car aerial is connected to an electrical circuit in the car.

Describe what happens in the electrical circuit when the car aerial absorbs radio waves.

[2 marks]

0 6 . 3 The car produces sound waves.

Give **two** ways in which radio waves are different to sound waves.

[2 marks]

1

2

Question 6 continues on the next page

Do not write outside the box

Figure 9 shows the distance-time graph for the first 30 seconds of the car's motion.

Figure 9

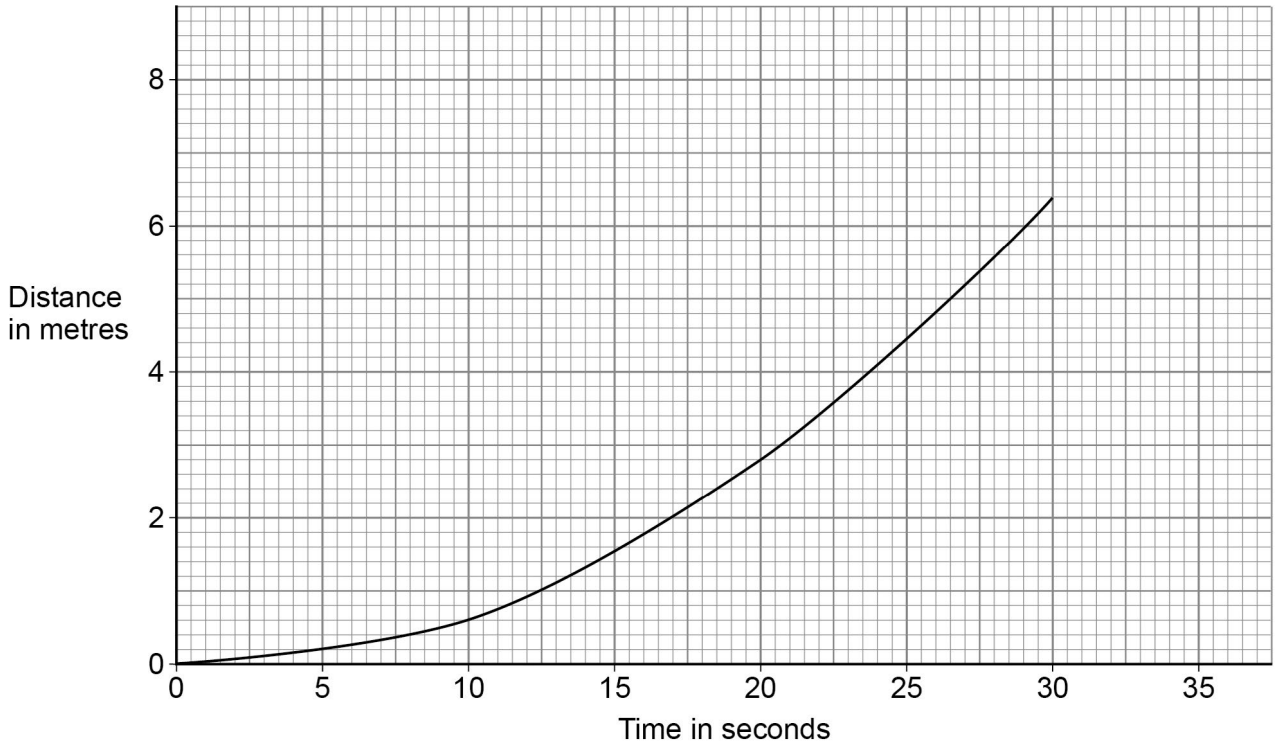

0 6 . 4 Describe the motion of the car during the first 30 seconds.

[1 mark]

_____

0 6 . 5 Determine the speed of the car 20 seconds after it started to move.

[4 marks]

_____

_____

_____

_____

_____

Speed = _____ m/s

Do not write outside the box

0 6 . 6 A different car accelerated from 0.12 m/s to 0.52 m/s.

The acceleration of the car was 0.040 m/s^2.

The work done to accelerate the car was 0.48 J.

Calculate the resultant force needed to accelerate the car.

[6 marks]

Resultant force = _____ N

0 6 . 7 Explain why the car has a maximum speed.

[4 marks]

24

Do not write outside the box

0 7 **Figure 10** shows a portable power supply.

Figure 10

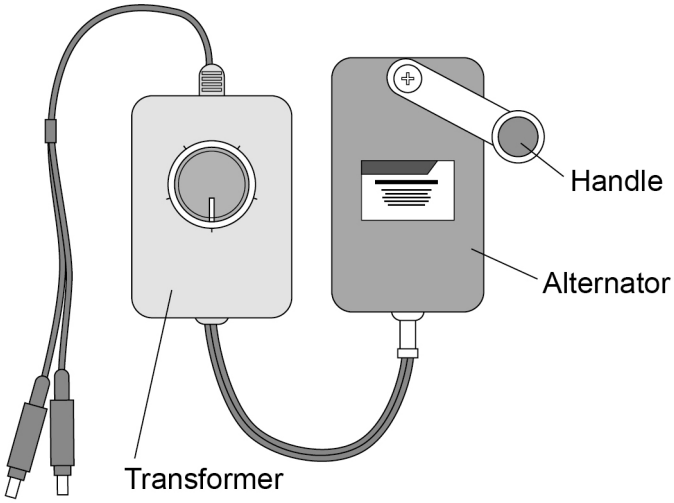

0 7 . 1 The portable power supply has an alternator connected to a transformer.

The transformer can be adjusted to have different numbers of turns on the secondary coil.

Suggest why.

[2 marks]

Do not write outside the box

0 7 . 2 A lamp is connected to the power supply.

The lamp requires an input potential difference of 5.0 V.

The alternator generates a potential difference of 1.5 V.

The primary coil of the transformer has 150 turns.

Calculate the number of turns needed on the secondary coil.

[3 marks]

Number of turns on the secondary coil = _____

Question 7 continues on the next page

Do not write outside the box

Figure 11 shows the inside parts of the alternator.

Figure 11

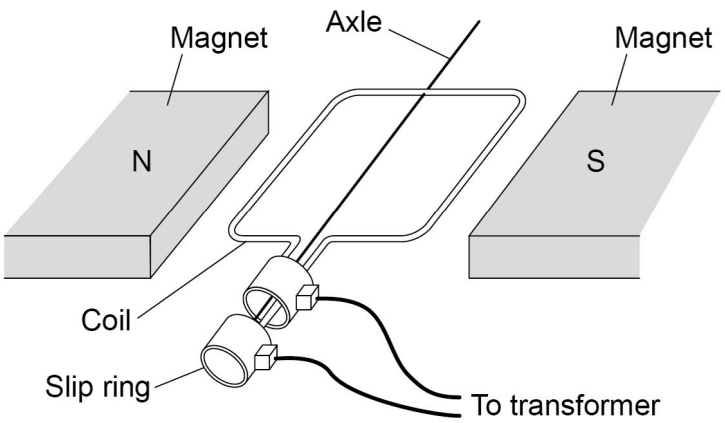

0 7 . 3 The handle of the alternator is turned, causing the coil to rotate.

Explain why an alternating current is induced in the coil.

[5 marks]

Do not write outside the box

0 7 . 4 Suggest the purpose of the slip rings.

[1 mark]

0 7 . 5 The alternator from the portable power supply is disconnected from the transformer and lamp.

Explain why the handle of the alternator becomes much easier to turn.

[3 marks]

14

END OF QUESTIONS

Do not write outside the box

There are no questions printed on this page

DO NOT WRITE ON THIS PAGE
ANSWER IN THE SPACES PROVIDED

Do not write outside the box

Question number	**Additional page, if required.** **Write the question numbers in the left-hand margin.**

Do not write outside the box

Question number	**Additional page, if required.** **Write the question numbers in the left-hand margin.**

Do not write outside the box

Question number	**Additional page, if required.** **Write the question numbers in the left-hand margin.**

Do not write outside the box

There are no questions printed on this page

DO NOT WRITE ON THIS PAGE
ANSWER IN THE SPACES PROVIDED

Copyright information

For confidentiality purposes, all acknowledgements of third-party copyright material are published in a separate booklet. This booklet is published after each live examination series and is available for free download from www.aqa.org.uk.

Permission to reproduce all copyright material has been applied for. In some cases, efforts to contact copyright-holders may have been unsuccessful and AQA will be happy to rectify any omissions of acknowledgements. If you have any queries please contact the Copyright Team.

Copyright © 2020 AQA and its licensors. All rights reserved.