AQA

Please write clearly in block capitals.

Centre number | | | | | | Candidate number | | | | |

Surname _____

Forename(s) _____

Candidate signature _____
I declare this is my own work.

GCSE
PHYSICS

F

Foundation Tier Paper 2

Friday 12 June 2020 Morning Time allowed: 1 hour 45 minutes

Materials
For this paper you must have:
- a ruler
- a scientific calculator
- a protractor
- the Physics Equations Sheet (enclosed).

Instructions
- Use black ink or black ball-point pen. Pencil should only be used for drawing.
- Fill in the boxes at the top of this page.
- Answer **all** questions in the spaces provided.
- Do not write outside the box around each page or on blank pages.
- If you need extra space for your answer(s), use the lined pages at the end of this book. Write the question number against your answer(s).
- Do all rough work in this book. Cross through any work you do not want to be marked.
- In all calculations, show clearly how you work out your answer.

Information
- The maximum mark for this paper is 100.
- The marks for questions are shown in brackets.
- You are expected to use a calculator where appropriate.
- You are reminded of the need for good English and clear presentation in your answers.

For Examiner's Use	
Question	Mark
1	
2	
3	
4	
5	
6	
7	
8	
9	
TOTAL	

Do not write outside the box

There are no questions printed on this page

DO NOT WRITE ON THIS PAGE
ANSWER IN THE SPACES PROVIDED

Do not write outside the box

Answer **all** questions in the spaces provided.

0 1 A student dropped a piece of modelling clay into oil.

Figure 1 shows the modelling clay just before it was dropped into the oil.

Figure 1

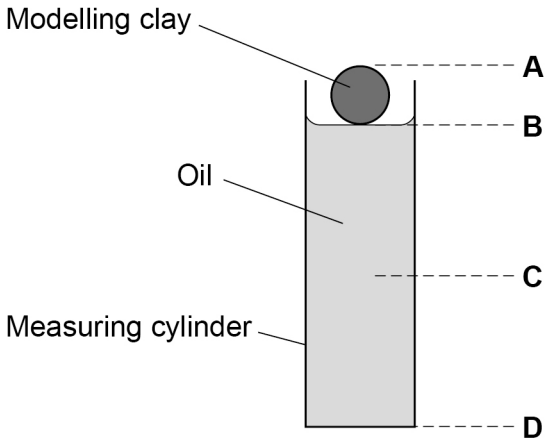

0 1 . 1 What was the distance fallen by the modelling clay?

[1 mark]

Tick (✓) **one** box.

from A to C ☐

from A to D ☐

from B to C ☐

from B to D ☐

0 1 . 2 What measuring instrument should be used to measure the distance fallen?

[1 mark]

_____

Question 1 continues on the next page

Do not write outside the box

The student dropped four pieces of modelling clay, each with a different shape.

For each piece the student measured the time taken to fall the same distance through the oil.

0 1 . 3 The student removed each piece of modelling clay from the oil before dropping the next piece.

Suggest **one** reason why.

[1 mark]

The student repeated the measurements and calculated mean values.

Table 1 shows the results.

Table 1

Shape	Time taken in seconds			
	Drop 1	Drop 2	Drop 3	Mean
Sphere	47	38	41	42
Cube	68	49	57	58
Cylinder	34	37	34	**X**
Cone	29	23	26	26

0 1 . 4 Calculate value **X** in **Table 1**.

[2 marks]

X = _____ s

Do not write outside the box

0 1 . 5 Each piece of modelling clay had the same mass.

Which shape in **Table 1** had the smallest resistive force acting against it as it fell?

Tick (✓) **one** box.

Give **one** reason for your answer.

[2 marks]

Cone ☐

Cube ☐

Cylinder ☐

Sphere ☐

Reason _____

_____

0 1 . 6 How would the time taken to fall change if the modelling clay was dropped through air instead of through oil?

[1 mark]

Tick (✓) **one** box.

Time through air would be less. ☐

Time through air would be more. ☐

Time through air would be the same. ☐

Question 1 continues on the next page

Do not write outside the box

0 1 . 7 The mass of a piece of modelling clay was 0.050 kg.

gravitational field strength = 9.8 N/kg

Calculate the weight of the piece of modelling clay.

Use the equation:

weight = mass × gravitational field strength

[2 marks]

_____

_____

Weight = _____ N

0 1 . 8 Weight causes the modelling clay to fall through the oil.

Weight is a non-contact force.

Which of the following are also non-contact forces?

[2 marks]

Tick (✓) **two** boxes.

Air resistance ☐

Electrostatic force ☐

Friction ☐

Magnetic force ☐

Tension ☐

12

Do not write outside the box

Turn over for the next question

DO NOT WRITE ON THIS PAGE
ANSWER IN THE SPACES PROVIDED

Do not write outside the box

0 2 Our solar system includes the Sun, planets and moons.

0 2 . 1 Complete the sentence.

Choose the answer from the box.

[1 mark]

Andromeda	**Milky Way**	**Pinwheel**	**Whirlpool**

Our solar system is part of the _____ galaxy.

0 2 . 2 Planets orbit the Sun.

What force causes planets to orbit the Sun?

[1 mark]

_____

Table 2 shows data about five planets.

Table 2

Planet	**Mean distance from the Sun in millions of kilometres**	**Mean surface temperature in °C**
Earth	150	+22
Mars	228	–48
Jupiter	778	**X**
Saturn	1430	–178
Uranus	2870	–200

0 2 . 3 How does the mean surface temperature of the planets in **Table 2** change as the mean distance from the Sun increases?

[1 mark]

_____

_____

Do not write outside the box

0 2 . 4 Predict the mean surface temperature of Jupiter (**X**) in **Table 2**.

[1 mark]

Mean surface temperature of Jupiter = _____ °C

0 2 . 5 Five of the planets in the solar system are given in **Table 2**.

How many other planets are there in the solar system?

[1 mark]

Tick (✓) **one** box.

Two ☐

Three ☐

Four ☐

Five ☐

0 2 . 6 Our Moon is a natural satellite.

Why is the Moon classified as a satellite?

[1 mark]

Tick (✓) **one** box.

It has no atmosphere. ☐

It has no gravitational field. ☐

It is too small to be a planet. ☐

It orbits a planet. ☐

Question 2 continues on the next page

Do not write outside the box

0 2 . 7 How are planets and moons similar?

[2 marks]

Tick (✓) **two** boxes.

Their mass is about the same. ☐

Their orbits are circular. ☐

Their surfaces are the same colour. ☐

They are similar in diameter. ☐

They do not emit visible light. ☐

0 2 . 8 The diameter of the Earth is 13 000 km.

The diameter of the Sun is 110 times greater than the diameter of the Earth.

Calculate the diameter of the Sun.

[2 marks]

Diameter of the Sun = _____ km

10

Do not write outside the box

Turn over for the next question

DO NOT WRITE ON THIS PAGE
ANSWER IN THE SPACES PROVIDED

Do not write outside the box

0 3 **Figure 2** shows some waves.

Figure 2

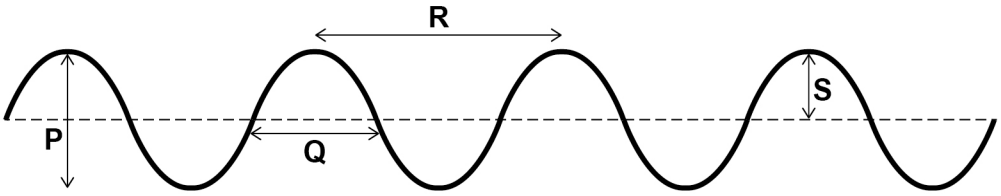

0 3 . 1 Which arrow represents the wavelength of the waves?

[1 mark]

Tick (✓) **one** box.

P ☐

Q ☐

R ☐

S ☐

0 3 . 2 Which arrow represents the amplitude of the waves?

[1 mark]

Tick (✓) **one** box.

P ☐

Q ☐

R ☐

S ☐

Do not write outside the box

0 3 . 3 The waves have a frequency of 0.20 hertz.

Calculate the period of the waves.

Use the equation:

$$\text{period} = \frac{1}{\text{frequency}}$$

[2 marks]

Period = _____ s

0 3 . 4 The frequency of the waves is increased. The speed of the waves stays the same.

What happens to the wavelength of the waves?

[1 mark]

Tick (✓) **one** box.

The wavelength decreases. ☐

The wavelength increases. ☐

The wavelength stays the same. ☐

Question 3 continues on the next page

Do not write outside the box

A student investigated how the speed of water waves is affected by the depth of water in a tray.

Figure 3 shows some water in a rectangular tray.

Figure 3

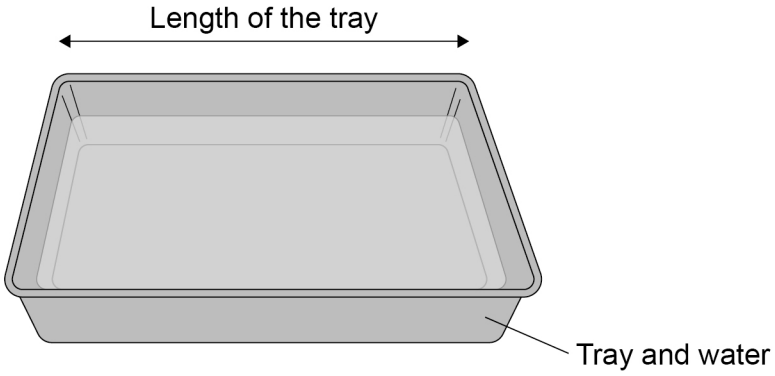

The student lifted one end of the tray and then dropped it.

This made a wave which travelled the length of the tray.

0 3 . 5 The student measured the length of the tray.

What else should the student measure in order to calculate the speed of the wave?

[1 mark]

Tick (✓) **one** box.

Area of the bottom of the tray ☐

Depth of water in the tray ☐

Temperature of the water in the tray ☐

Time taken by the wave to travel the length of the tray ☐

Do not write outside the box

0 3 . 6 What was the independent variable in this investigation?

[1 mark]

Depth of water ☐

Length of tray ☐

Speed of waves ☐

Question 3 continues on the next page

Do not write outside the box

Figure 4 shows the results.

Figure 4

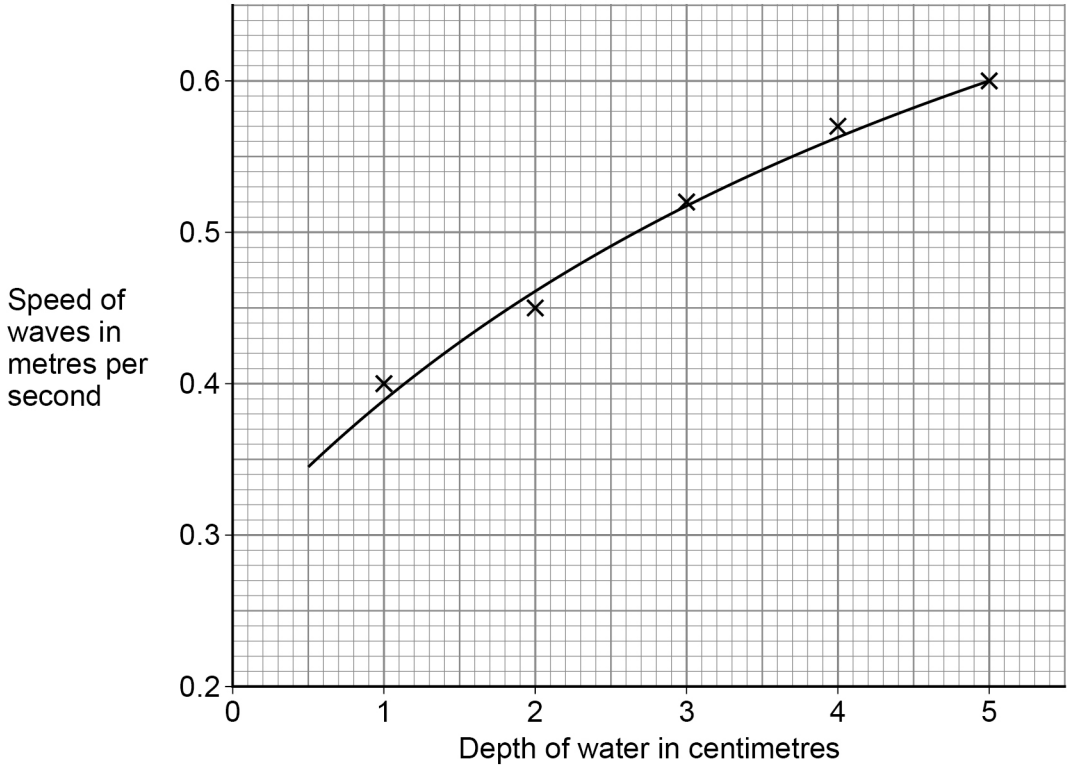

0 3 . 7 Give **one** conclusion that can be made from **Figure 4**.

[1 mark]

_____

_____

0 3 . 8 What was the speed of a wave when the depth of water was 2.5 cm?

[1 mark]

Speed of wave = _____ m/s

9

Do not write outside the box

0 4 . 1 Visible light is used for communications.

Which other parts of the electromagnetic spectrum are used for communications?

[2 marks]

Tick (✓) **two** boxes.

Gamma rays ☐

Microwaves ☐

Radio waves ☐

Ultraviolet ☐

X-rays ☐

Figure 5 shows a ray of light in an optical fibre.

Figure 5

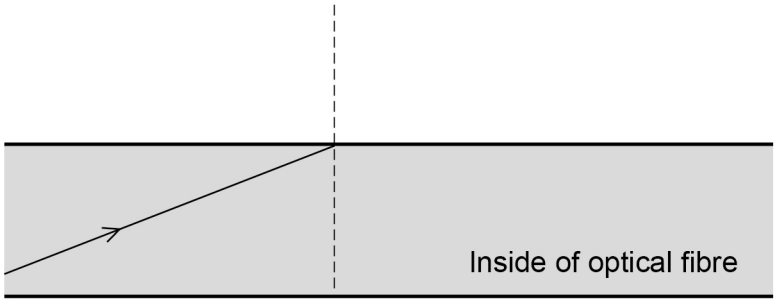

0 4 . 2 What is the name given to the dotted line on **Figure 5**?

[1 mark]

_____

0 4 . 3 Where the ray of light touches the edge of the optical fibre it is reflected.

Draw the reflected ray on **Figure 5**.

[2 marks]

Question 4 continues on the next page

Do not write outside the box

0 4 . 4 Optical fibres need to be able to bend around corners without breaking.

Suggest the property that optical fibres must have to allow them to bend around corners.

[1 mark]

_____

_____

0 4 . 5 The appearance of visible light can change when it interacts with different objects.

Complete the sentences.

Choose the answers from the box.

Each answer may be used once, more than once or not at all.

[3 marks]

absorbed	**reflected**	**refracted**	**transmitted**

When white light is incident on a green filter, only green light passes through the filter.

This is because green light is _____ by the filter.

All other colours of light are _____ by the filter.

When red light shines on a blue object the red light is _____.

9

Do not write outside the box

0 5 A student placed a magnet on top of a plastic support in a bowl of water. This magnet was fixed in position and above the surface of the water.

The student put a second magnet into a piece of cork so that the magnet floated on the water. Only the north pole of the floating magnet was above the surface of the water.

Figure 6 shows the arrangement of the magnets.

Figure 6

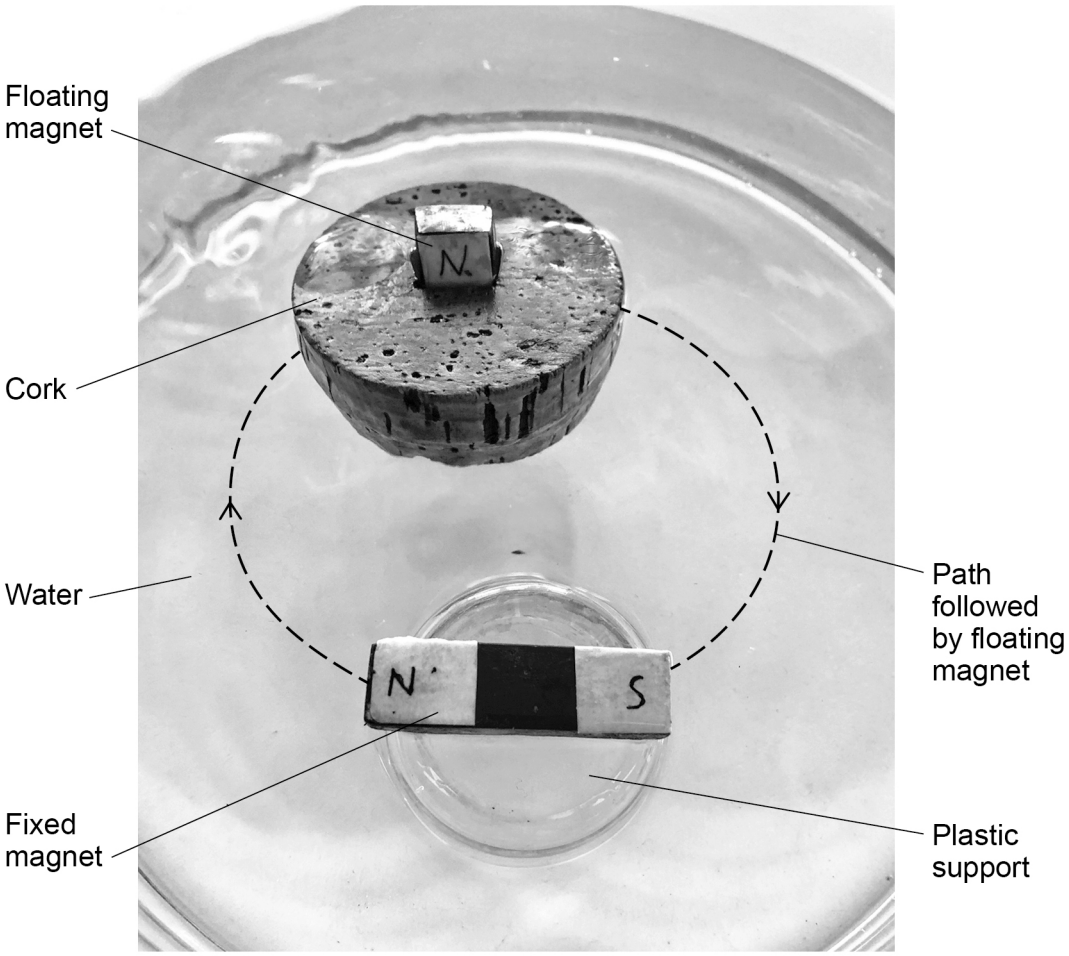

0 5 . 1 The floating magnet was placed near to the north pole of the fixed magnet. The floating magnet then moved along the path shown in **Figure 6**.

Explain why.

[2 marks]

_____

_____

_____

_____

Do not write outside the box

0 5 . 2 The student replaced the floating magnet with a piece of iron.

What happened to the piece of iron?

[1 mark]

0 5 . 3 Describe how to use a compass to plot the magnetic field pattern around a bar magnet.

Use **Figure 7** to help you.

[4 marks]

Figure 7

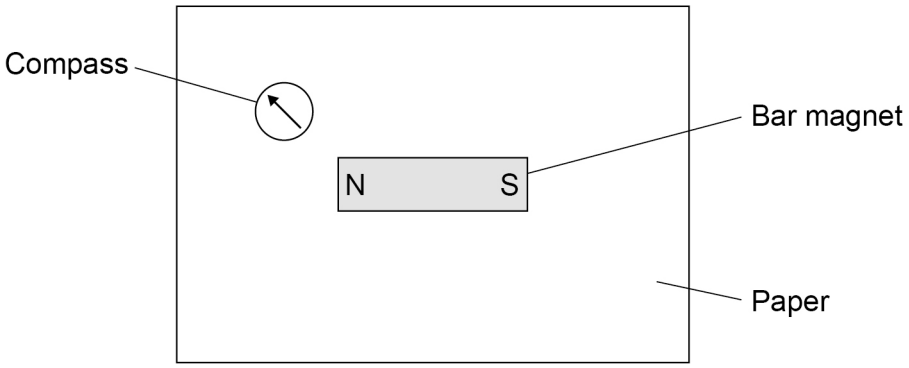

Do not write outside the box

Figure 8 shows a diagram of an electromagnetic lock used to secure a door.

Figure 8

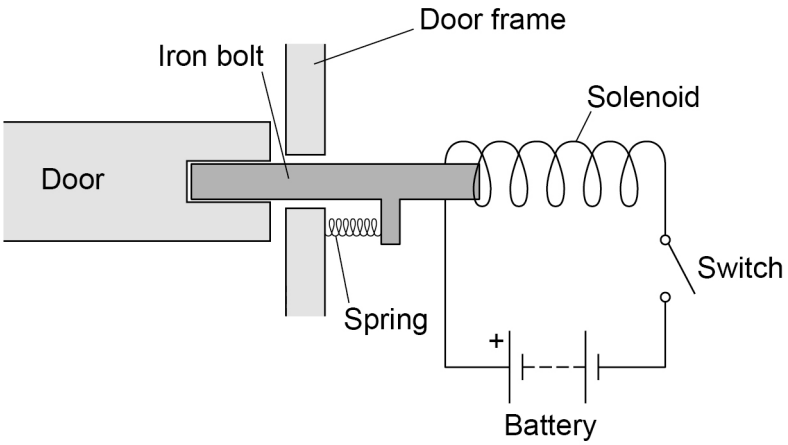

0 5 . 4 **Figure 9** shows an incomplete sequence of how the door unlocks.

Figure 9

Write **one** letter in each box to show the correct sequence.

[2 marks]

A The iron bolt moves.

B A magnetic field is created around the solenoid.

C There is a current in the circuit.

Question 5 continues on the next page

Do not write outside the box

0 5 . 5 The electromagnetic lock contains a spring.

When the door is unlocked the extension of the spring is 0.040 m.

spring constant = 200 N/m

Calculate the elastic potential energy of the spring when the door is unlocked.

Use the equation:

$$\text{elastic potential energy} = 0.5 \times \text{spring constant} \times (\text{extension})^2$$

[2 marks]

Elastic potential energy = _____ J

11

Do not write outside the box

0 6 . 1 **Figure 10** shows the position of three types of wave in the electromagnetic spectrum.

Figure 10

A	Microwaves	**B**	Visible light	**C**	**D**	Gamma rays

Which letter represents the position of X-rays in the electromagnetic spectrum?

[1 mark]

Tick (✓) **one** box.

A ☐ **B** ☐ **C** ☐ **D** ☐

Question 6 continues on the next page

Do not write outside the box

A doctor needs to obtain an image of a bone in a patient's injured arm.

The doctor takes an X-ray of the arm.

0 6 . 2 Give **one** possible harmful consequence of receiving a dose of X-ray radiation.

[1 mark]

Table 3 gives information about two methods of bone imaging.

Table 3

Method	**Radiation dose in millisieverts**
X-ray of arm	0.1
CT scan of arm	6.0

0 6 . 3 Compare the risk of harm to the patient of having an X-ray rather than a CT scan.

[2 marks]

Do not write outside the box

0 6 . 4 Which of the following is the same as 6.0 millisieverts?

[1 mark]

Tick (✓) **one** box.

0.60 sieverts ☐

0.060 sieverts ☐

0.0060 sieverts ☐

0.00060 sieverts ☐

0 6 . 5 The patient received a total radiation dose of 2.5 millisieverts during one year.

Calculate the percentage of this dose that came from one X-ray of the arm.

Use the data in **Table 3**.

[2 marks]

_____

_____

_____

Percentage = _____ %

7

Turn over for the next question

Do not write outside the box

0 7 . 1 An aircraft travels at a constant velocity.

How is the velocity of the aircraft different to the speed of the aircraft?

[1 mark]

0 7 . 2 **Figure 11** shows one of the engines on the aircraft.

Figure 11

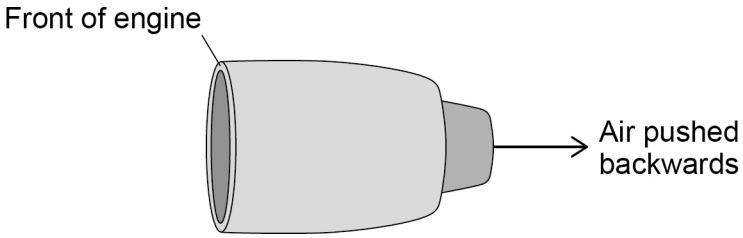

Air is taken into the front of the engine and pushed out of the back of the engine.

Explain the effect this has on the engine.

[2 marks]

Do not write outside the box

0 7 . 3 **Figure 12** shows a distance-time graph for the aircraft.

Figure 12

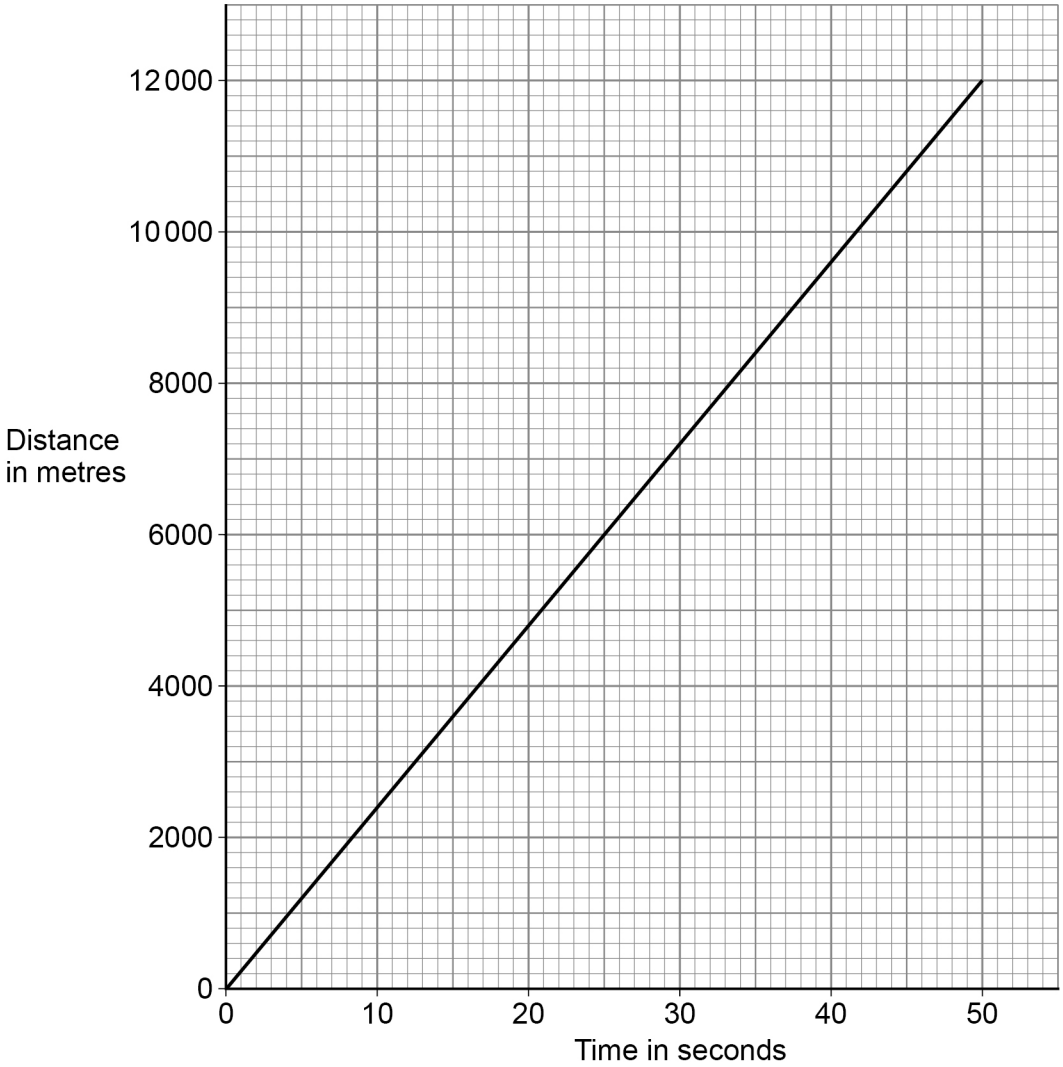

Determine the speed of the aircraft.

[3 marks]

Speed = _____ m/s

Question 7 continues on the next page

Do not write outside the box

0 7 . 4 Write down the equation that links acceleration (a), change in velocity (Δv) and time taken (t).

[1 mark]

0 7 . 5 At a different stage of the flight, the aircraft was travelling at a velocity of 250 m/s.

The aircraft then decelerated at 0.14 m/s^2.

Calculate the time taken for the aircraft to decelerate from 250 m/s to 68 m/s.

[4 marks]

Time = _____ s

Do not write outside the box

0 7 . 6 Write down the equation that links distance (*s*), force (*F*) and work done (*W*).

[1 mark]

_____

0 7 . 7 When the aircraft landed, it travelled 2000 m before stopping.

The work done to stop the aircraft was 140 000 000 J.

Calculate the mean force used to stop the aircraft.

[3 marks]

_____

_____

_____

_____

_____

_____

Mean force = _____ N

15

Turn over for the next question

Do not write outside the box

0 8 A student investigated the acceleration of a trolley.

Figure 13 shows how the student set up the apparatus.

Figure 13

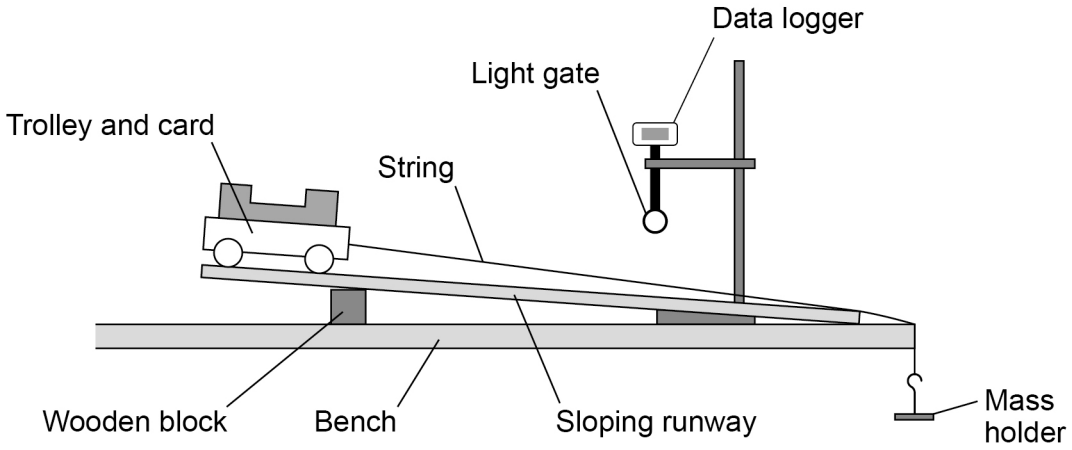

0 8 . 1 Before attaching the mass holder the student placed the trolley at the top of the runway. The trolley rolled down the runway without being pushed.

What change to the apparatus in **Figure 13** could be made to prevent the trolley from starting to roll down the runway?

[1 mark]

Tick (✓) **one** box.

Move the wooden block to the left. ☐

Shorten the length of the runway. ☐

Use a taller wooden block. ☐

0 8 . 2 The student attached the mass holder to the string.

The string rubbed along the edge of the bench as the mass holder fell to the floor.

Suggest what the student could do to prevent the string from rubbing.

[1 mark]

_____

_____

Do not write outside the box

The light gate and data logger were used to determine the acceleration of the trolley.

The student increased the resultant force on the trolley and recorded the acceleration of the trolley.

Table 4 shows the results.

Table 4

Resultant force in newtons	Acceleration in m/s²
0.05	0.08
0.10	0.18
0.15	0.25
0.20	0.32
0.25	0.41

Figure 14 is an incomplete graph of the results.

Figure 14

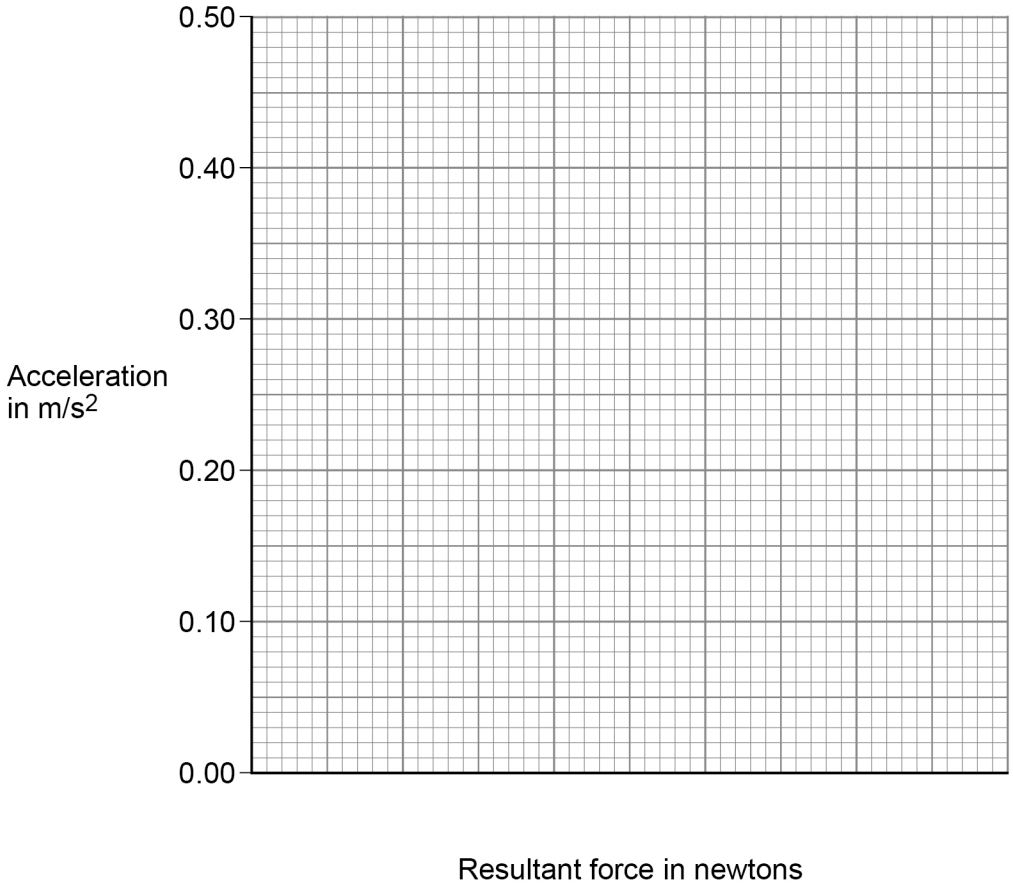

0 8 . 3 Complete **Figure 14**.

- Choose a suitable scale for the x-axis.
- Plot the results.
- Draw a line of best fit.

[4 marks]

Do not write outside the box

0 8 . 4 Describe the relationship between the resultant force on the trolley and the acceleration of the trolley.

[1 mark]

0 8 . 5 Describe how the investigation could be improved to reduce the effect of random errors.

[2 marks]

0 8 . 6 Write down the equation that links acceleration (a), mass (m) and resultant force (F).

[1 mark]

0 8 . 7 The resultant force on the trolley was 0.375 N.

The mass of the trolley was 0.60 kg.

Calculate the acceleration of the trolley.

Give your answer to 2 significant figures.

[4 marks]

Acceleration (2 significant figures) = _____ m/s^2

14

Do not write outside the box

0 9 . 1 Complete the sentences.

[2 marks]

The Sun is a stable star. This is because the forces pulling inwards caused by

_____ are in equilibrium with the forces pushing outwards caused

by the energy released by nuclear _____.

0 9 . 2 Write down the equation that links distance travelled (s), speed (v) and time (t).

[1 mark]

_____

0 9 . 3 The mean distance between the Sun and the Earth is 1.5×10^{11} m.

Light travels at a speed of 3.0×10^{8} m/s.

Calculate the time taken for light from the Sun to reach the Earth.

[3 marks]

_____

_____

_____

_____

_____

Time = _____ s

Question 9 continues on the next page

Do not write outside the box

0 9 . 4 Some stars are much more massive than the Sun.

Describe the life cycle of stars much more massive than the Sun, including the formation of new elements.

[6 marks]

Do not write outside the box

0 9 . 5 Stars emit radiation with a range of wavelengths.

Which property of a star does the range of wavelengths depend on?

[1 mark]

Tick (✓) **one** box.

Density ☐

Mass ☐

Temperature ☐

Volume ☐

13

END OF QUESTIONS

Do not write outside the box

There are no questions printed on this page

DO NOT WRITE ON THIS PAGE
ANSWER IN THE SPACES PROVIDED

Do not write outside the box

Question number	**Additional page, if required.** **Write the question numbers in the left-hand margin.**

Do not write outside the box

Question number	**Additional page, if required.** **Write the question numbers in the left-hand margin.**

Do not write outside the box

Question number	**Additional page, if required.** **Write the question numbers in the left-hand margin.**

Do not write outside the box

There are no questions printed on this page

DO NOT WRITE ON THIS PAGE
ANSWER IN THE SPACES PROVIDED

Copyright information

For confidentiality purposes, all acknowledgements of third-party copyright material are published in a separate booklet. This booklet is published after each live examination series and is available for free download from www.aqa.org.uk.

Permission to reproduce all copyright material has been applied for. In some cases, efforts to contact copyright-holders may have been unsuccessful and AQA will be happy to rectify any omissions of acknowledgements. If you have any queries please contact the Copyright Team.

Copyright © 2020 AQA and its licensors. All rights reserved.