AQA

Please write clearly in block capitals.

Centre number | | | | | | Candidate number | | | | |

Surname _____

Forename(s) _____

Candidate signature _____
I declare this is my own work.

GCSE
PHYSICS

H

Higher Tier Paper 2

Friday 14 June 2024 Afternoon Time allowed: 1 hour 45 minutes

Materials
For this paper you must have:
- a ruler
- a scientific calculator
- a protractor
- the Physics Equations Sheet (enclosed).

Instructions
- Use black ink or black ball-point pen. Pencil should only be used for drawing.
- Fill in the boxes at the top of this page.
- Answer **all** questions in the spaces provided.
- Do not write outside the box around each page or on blank pages.
- Do all rough work in this book. Cross through any work you do not want to be marked.
- If you need extra space for your answer(s), use the lined pages at the end of this book. Write the question number against your answer(s).
- In all calculations, show clearly how you work out your answer.

Information
- The maximum mark for this paper is 100.
- The marks for questions are shown in brackets.
- You are expected to use a calculator where appropriate.
- You are reminded of the need for good English and clear presentation in your answers.

For Examiner's Use	
Question	Mark
1	
2	
3	
4	
5	
6	
7	
8	
TOTAL	

Do not write outside the box

Answer **all** questions in the spaces provided.

0 1 A student investigated the refraction of light by a glass block.

Figure 1 shows the protractor used to measure the angles of incidence and the angles of refraction.

Figure 1

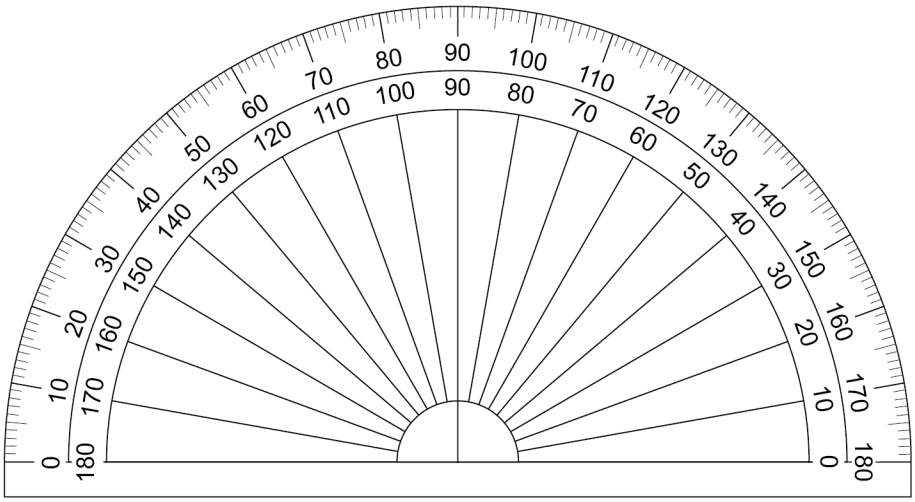

0 1 . 1 What is the resolution of the protractor used to measure the angles?

[1 mark]

Resolution = _____ °

Table 1 shows the results.

Table 1

Angle of incidence in degrees	Angle of refraction in degrees
10	6
20	12
30	18
40	23
50	28
60	32

Do not write outside the box

0 1 . 2 Describe a method the student could have used to obtain the data in **Table 1**.

You may include a labelled diagram.

[6 marks]

Do not write outside the box

Figure 2 shows some of the results.

Figure 2

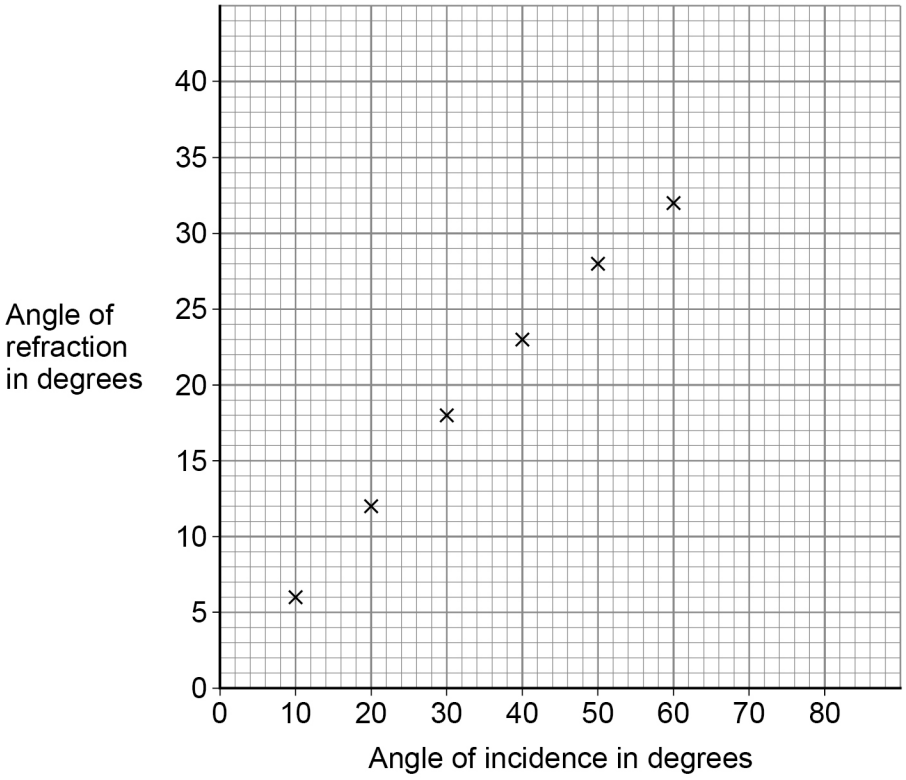

The student measured the angles of refraction for two additional angles of incidence.

Table 2 shows the additional results.

Table 2

Angle of incidence in degrees	Angle of refraction in degrees
70	35
80	37

Do not write outside the box

0 1 . 3 Complete **Figure 2**.

You should:

- plot the results from **Table 2**
- draw the line of best fit.

[2 marks]

0 1 . 4 How does **Figure 2** show that the angle of refraction is **not** directly proportional to the angle of incidence?

[1 mark]

_____

_____

Question 1 continues on the next page

Do not write outside the box

Figure 3 shows a diagram of a car headlight.

The headlight has a lamp, a reflective surface and a transparent cover.

Figure 3

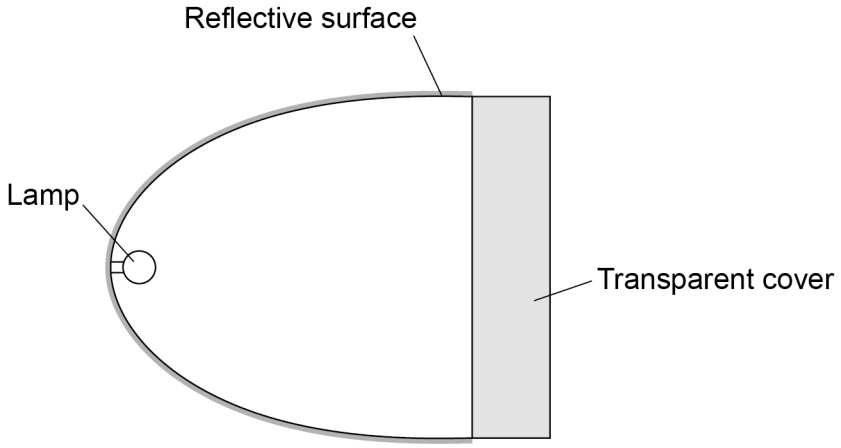

0 1 . 5 **Figure 4** shows a ray of light incident on the reflective surface.

Figure 4

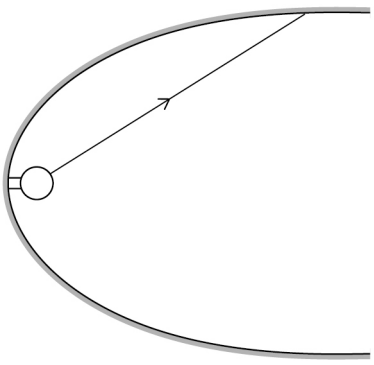

Complete **Figure 4** to show the reflected ray of light.

You should include the normal line at the point where the incident ray meets the reflecting surface.

[2 marks]

Do not write outside the box

0 1 . 6 Rays of light pass through the transparent cover of the headlight.

Which diagram shows how a ray of light passes through the transparent cover?

[1 mark]

Tick (✓) **one** box.

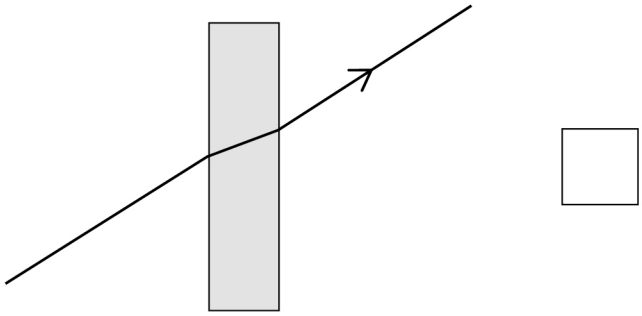

☐

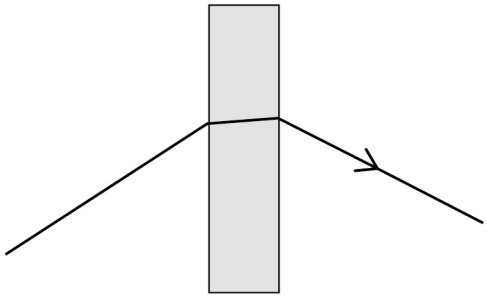

☐

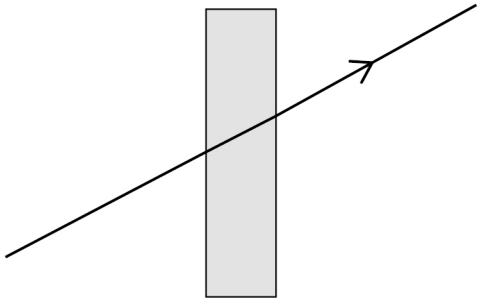

☐

13

Turn over for the next question

Do not write outside the box

0 2 **Figure 5** shows a young child using a baby walker.

Figure 5

0 2 . 1 The child is standing still.

What is the resultant **vertical** force on the child?

Give a reason for your answer.

[2 marks]

Resultant vertical force = _____ N

Reason _____

_____

Do not write outside the box

Use the Physics Equations Sheet to answer questions **02.2** and **02.3**.

0 2 . 2 Write down the equation which links distance (s), force (F) and work done (W).

[1 mark]

_____

0 2 . 3 The child pushed the baby walker 2.8 m across a horizontal floor.

The work done by the child was 35 J.

Calculate the horizontal force the child applied to the baby walker.

[3 marks]

_____

_____

_____

_____

_____

Horizontal force = _____ N

0 2 . 4 The child pushed the baby walker from a carpet onto a hard floor.

The child applied the same horizontal force to the baby walker.

Explain why the speed of the baby walker increased.

[2 marks]

_____

_____

_____

_____

Do not write outside the box

There are some toy gears on the front of the baby walker.

Figure 6 shows the gears.

Figure 6

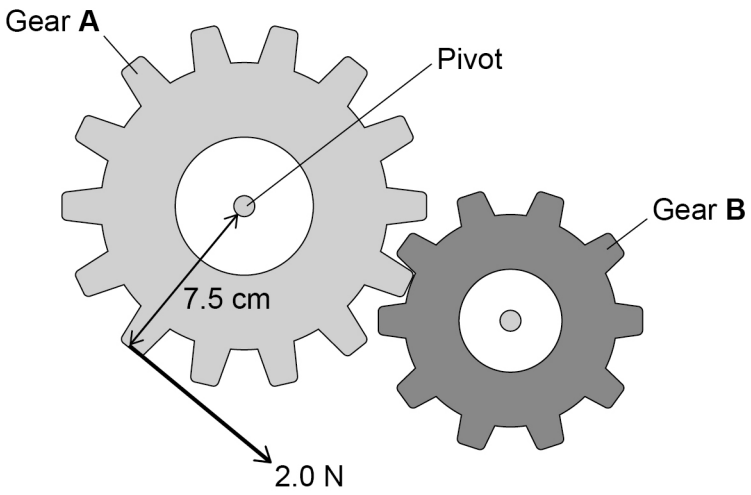

The child applies a force to gear **A**.

This causes a moment about the pivot, so gear **A** rotates.

Do not write outside the box

Use the Physics Equations Sheet to answer questions **02.5** and **02.6**.

0 2 . 5 Write down the equation which links distance (d), force (F) and moment of a force (M).

[1 mark]

_____

0 2 . 6 The child applies a force of 2.0 N on gear **A**.

The perpendicular distance between the force and the pivot is 7.5 cm.

Calculate the moment of the force about the pivot.

[3 marks]

_____

_____

_____

_____

_____

Moment of force = _____ N m

0 2 . 7 Explain what happens to gear **B** when the child applies the force to gear **A**.

[2 marks]

_____

_____

_____

_____

14

Do not write outside the box

0 3 The Universe contains many stars.

0 3 . 1 The Sun is the star at the centre of our solar system.

Give **three** other types of object that form our solar system.

[3 marks]

1 _____

2 _____

3 _____

Some main sequence stars will eventually form black holes.

Table 3 gives the mass of four stars.

Table 3

Star	**Mass in kg**
Arcturus	2.2×10^{30}
Betelgeuse	2.2×10^{31}
Cygni A	1.4×10^{30}
The Sun	2.0×10^{30}

0 3 . 2 Which star in **Table 3** is most likely to form a black hole?

[1 mark]

_____

Do not write outside the box

0 3 . 3 The distance from Cygni A to the Earth is 1.1×10^8 gigametres.

Which distance is the same as 1.1×10^8 gigametres?

[1 mark]

Tick (✓) **one** box.

1.1×10^{11} m ☐

1.1×10^{14} m ☐

1.1×10^{17} m ☐

1.1×10^{20} m ☐

Question 3 continues on the next page

Do not write outside the box

0 3 . 4 The light spectrum from every galaxy includes dark lines.

The lines have the same pattern.

Figure 7 shows the position of dark lines in the visible spectra of light from the Sun and from two distant galaxies.

Figure 7

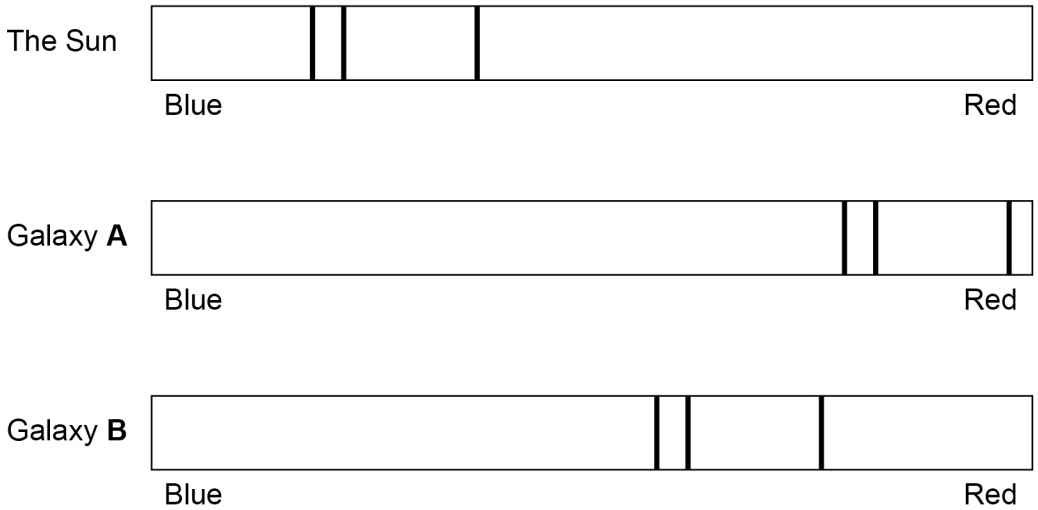

Explain what these light spectra tell us about the velocities of galaxy **A** and galaxy **B**.

[3 marks]

Do not write outside the box

0 3 . 5 The distance between Arcturus and the Earth is 3.6×10^{14} km.

speed of light = 3.0×10^{8} m/s

Calculate the time taken for light from Arcturus to reach the Earth.

Use the Physics Equations Sheet.

[4 marks]

Time taken = _____ s

0 3 . 6 When stars are formed, they contain mostly hydrogen.

Describe how stars produce all other naturally occurring elements.

[4 marks]

16

Do not write outside the box

0 4 The Mariana Trench is the deepest part of the Pacific Ocean.

Figure 8 shows a submarine going to the bottom of the Mariana Trench.

Figure 8

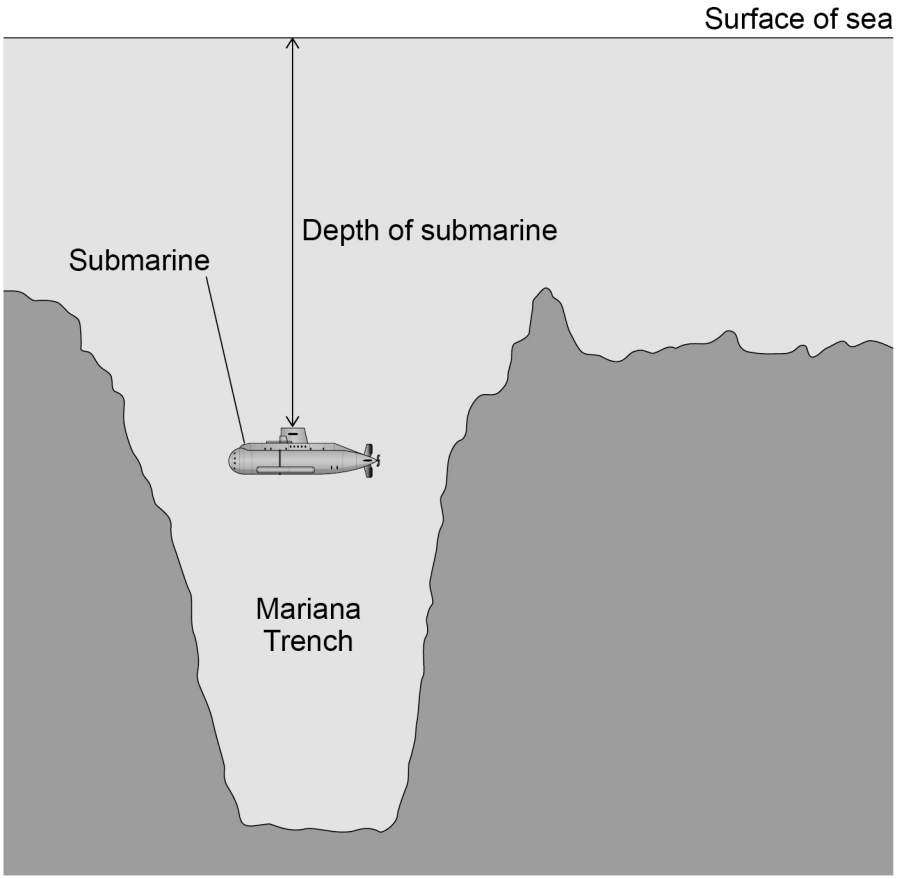

Not to scale

0 4 . 1 The depth of the submarine increases.

Explain what happens to the pressure on the submarine.

[2 marks]

Do not write outside the box

0 4 . 2 The submarine moved from the surface of the water to the bottom of the Mariana Trench.

The change in pressure was 110 000 kPa.

mean density of sea water = 1026 kg/m^3

gravitational field strength = 9.8 N/kg

Calculate the depth of the Mariana Trench.

Use the Physics Equations Sheet.

[4 marks]

Depth = _____ m

Question 4 continues on the next page

Do not write outside the box

Earthquakes often occur at the Mariana Trench.

P-waves and S-waves are produced by earthquakes.

0 4 . 3 Which statement describes P-waves and S-waves?

[1 mark]

Tick (✓) **one** box.

Both P-waves and S-waves are longitudinal. ☐

Both P-waves and S-waves are transverse. ☐

P-waves are longitudinal and S-waves are transverse. ☐

P-waves are transverse and S-waves are longitudinal. ☐

Do not write outside the box

0 4 . 4 **Figure 9** shows the layers inside the Earth.

An earthquake occurs at the position shown.

Figure 9

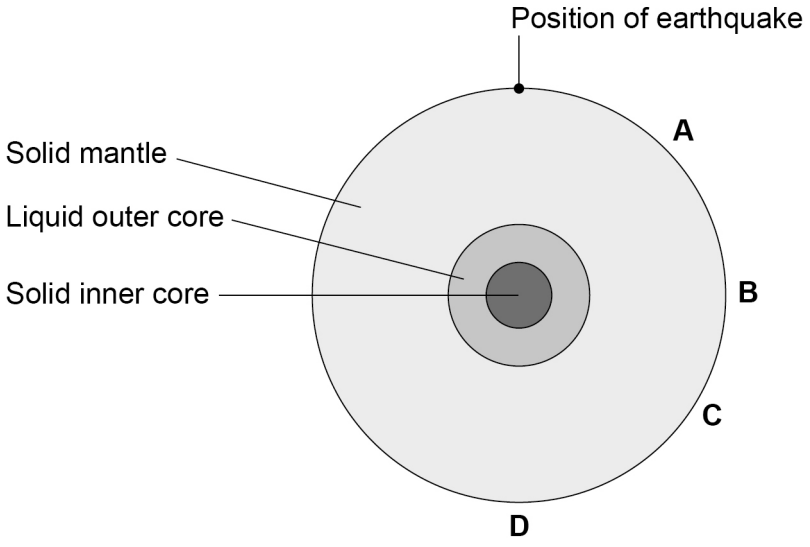

Which letter shows the position where **only** P-waves will be detected?

Give a reason for your answer.

[2 marks]

Tick (✓) **one** box.

A ☐ **B** ☐ **C** ☐ **D** ☐

Reason _____

_____

Question 4 continues on the next page

Do not write outside the box

0 4 . 5 An S-wave has a frequency of 3.6 Hz.

The S-wave has a speed of 4.5 km/s.

Calculate the wavelength of this S-wave.

Use the Physics Equations Sheet.

[3 marks]

Wavelength = _____ m

0 4 . 6 A seismometer is a device that detects earthquakes.

P-waves travel at a known speed between an earthquake and a seismometer.

S-waves travel at a slower speed than P-waves.

A P-wave and an S-wave from the earthquake arrive at the seismometer at different times.

Describe the relationship between the distance from the earthquake to the seismometer and the time between the P-wave and the S-wave arriving.

[2 marks]

14

Do not write outside the box

0 5 A student investigated how the acceleration of a trolley varies with the resultant force on the trolley.

Figure 10 shows some of the equipment used.

Figure 10

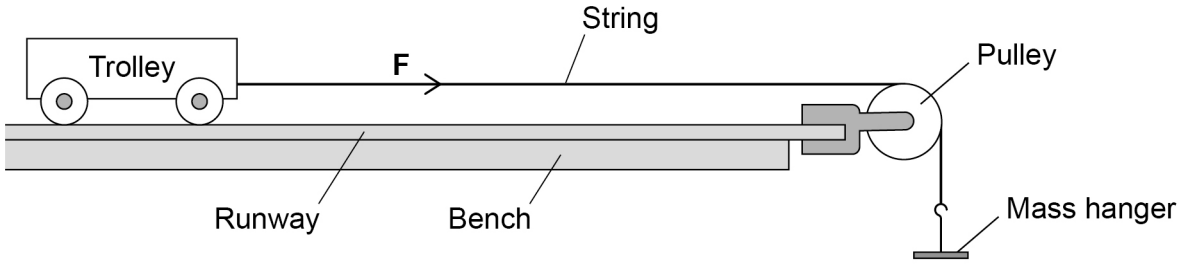

0 5 . 1 **Figure 10** shows the force **F** which acts through the string.

What name is given to force **F**?

[1 mark]

_____

0 5 . 2 Give **one** variable that should have been a control variable in this investigation.

[1 mark]

_____

Question 5 continues on the next page

Do not write outside the box

0 5 . 3 The student held the trolley stationary and then released it.

The trolley moved along the runway with a constant acceleration.

The student recorded the time taken for the trolley to travel a measured distance along the runway.

Describe how the acceleration of the trolley can be calculated using the time taken and distance travelled by the trolley.

[3 marks]

For one set of results, the force acting through the string was 2.0 N.

0 5 . 4 The student released the trolley three times and determined the following values for acceleration:

1.36 m/s^2 1.39 m/s^2 1.33 m/s^2

Calculate the uncertainty in the values of acceleration.

[2 marks]

Uncertainty = ± _____ m/s^2

Do not write outside the box

0 5 . 5 The runway was then raised at one end.

The force acting through the string remained the same.

Figure 11 shows this.

Figure 11

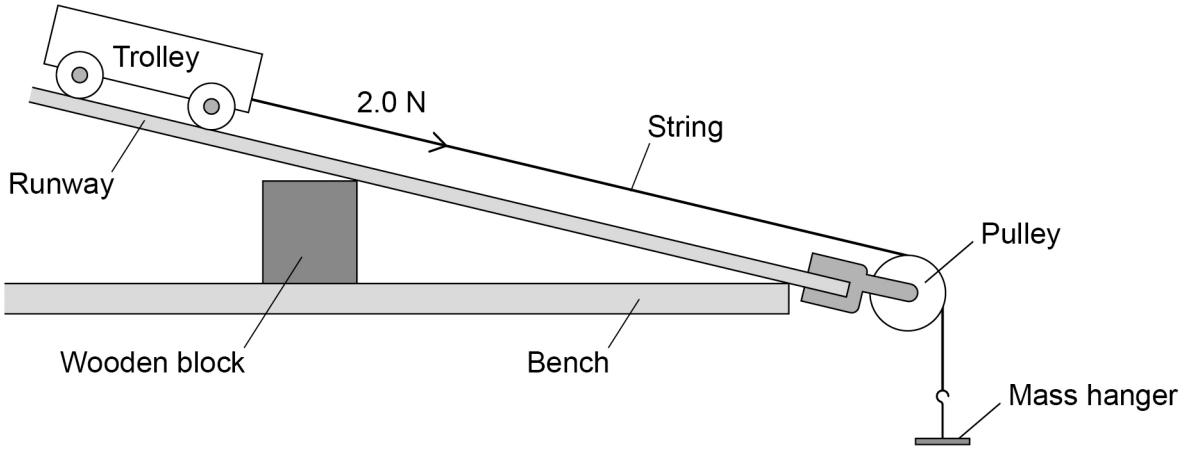

Explain how the acceleration was affected by raising the end of the runway.

[2 marks]

_____

_____

_____

_____

9

Turn over for the next question

Do not write outside the box

0 6 Radio waves and gamma rays both transfer energy.

0 6 . 1 Give **three** other similarities between radio waves and gamma rays.

[3 marks]

1 _____

_____

2 _____

_____

3 _____

_____

Do not write outside the box

Both radio waves and gamma rays are used in medicine.

0 6 . 2 Give **one** medical use of gamma rays.

[1 mark]

0 6 . 3 Explain why exposure to gamma rays can be harmful but exposure to radio waves is **not** harmful.

[2 marks]

0 6 . 4 Some medical scanners produce radio waves at a specific frequency.

Explain how radio waves are produced at a specific frequency.

[2 marks]

8

Turn over for the next question

Do not write outside the box

0 7 **Figure 12** shows a velocity–time graph for a train travelling between two stations.

Figure 12

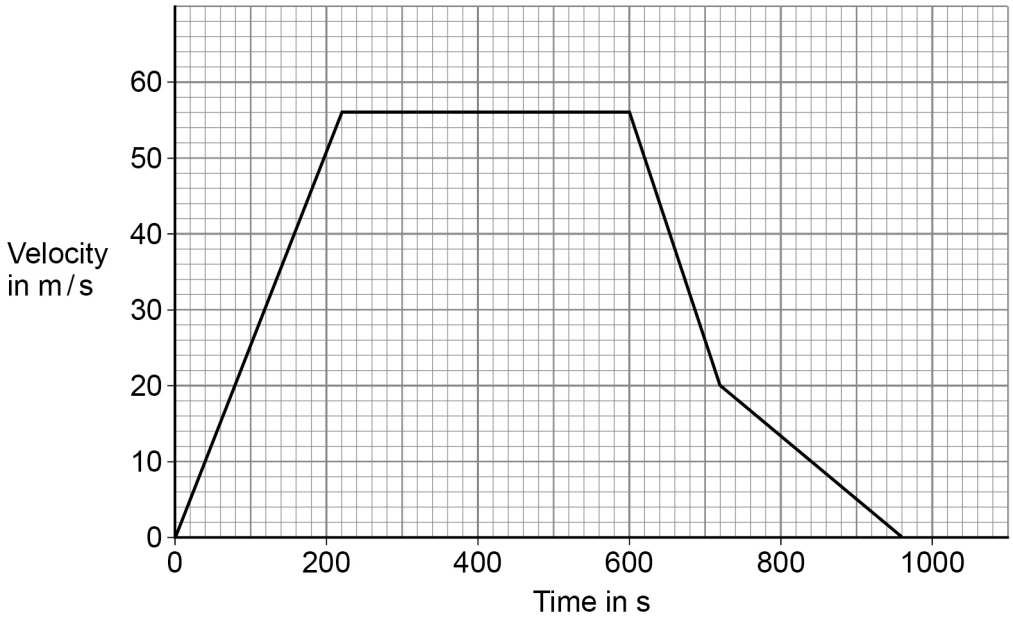

0 7 . 1 Determine the distance travelled by the train in the first 600 s of the journey.

[3 marks]

Distance = _____ m

Do not write outside the box

0 7 . 2 Explain what happens to the braking force as the train decelerates.

Use information from **Figure 12**.

[3 marks]

0 7 . 3 Determine the maximum deceleration of the train.

[3 marks]

Deceleration = _____ m/s^2

Question 7 continues on the next page

Do not write outside the box

0 7 . 4 Another train travels at a speed of 60 m/s.

A constant braking force of 270 000 N causes the train to decelerate and stop.

mass of train = 240 000 kg

Calculate the distance travelled while the braking force is applied.

Use the Physics Equations Sheet.

[6 marks]

Distance travelled = _____ m

Do not write outside the box

0 7 . 5 It is illegal for train drivers to drink alcohol before driving a train.

Explain how drinking alcohol would affect the stopping distance of a train.

[3 marks]

_____

_____

_____

_____

_____

_____

18

Turn over for the next question

Do not write outside the box

0 8 **Figure 13** shows some apparatus used by a teacher in a demonstration.

Figure 13

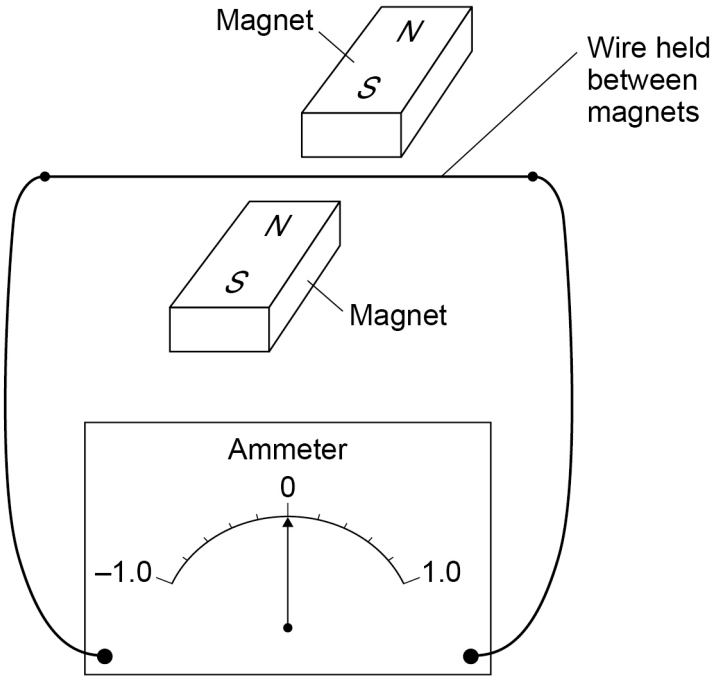

The teacher moved the wire upwards between the magnets.

The needle on the ammeter deflected to a value of +0.4 mA and then returned to zero.

0 8 . 1 What effect did this demonstrate?

[1 mark]

_____

Do not write outside the box

0 8 . 2 Explain why a current was detected when the wire in **Figure 13** was moved upwards.

[3 marks]

0 8 . 3 The teacher reversed the direction of the magnetic field.

The teacher replaced the wire in its original position.

The teacher moved the wire upwards in the same way as before.

What was the deflection of the needle on the ammeter?

[1 mark]

Tick (✓) **one** box.

The needle will deflect to –0.4 mA. ☐

The needle will not move. ☐

The needle will deflect to +0.4 mA. ☐

Question 8 continues on the next page

Do not write outside the box

0 8 . 4 **Figure 14** shows a sound wave incident on the diaphragm of a moving-coil microphone.

The inside of the microphone includes a small coil of wire and a magnet.

Figure 14

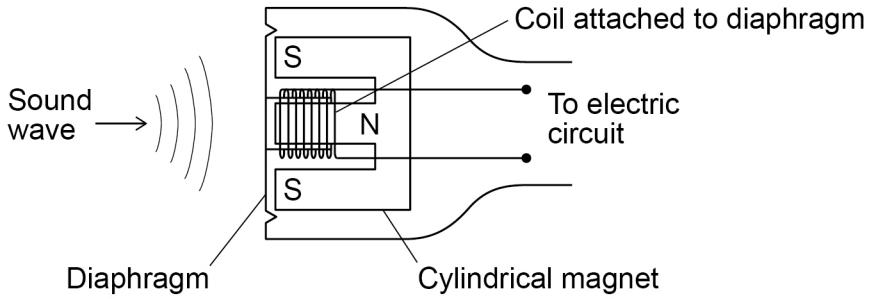

Explain why the sound waves have an effect on the electric circuit.

[3 marks]

8

END OF QUESTIONS

Do not write outside the box

There are no questions printed on this page

DO NOT WRITE ON THIS PAGE
ANSWER IN THE SPACES PROVIDED

Do not write outside the box

Question number	**Additional page, if required.** **Write the question numbers in the left-hand margin.**

Do not write outside the box

Question number	**Additional page, if required.** **Write the question numbers in the left-hand margin.**

Do not write outside the box

Question number	**Additional page, if required.** **Write the question numbers in the left-hand margin.**

Copyright information

For confidentiality purposes, all acknowledgements of third-party copyright material are published in a separate booklet. This booklet is published after each live examination series and is available for free download from www.aqa.org.uk.

Permission to reproduce all copyright material has been applied for. In some cases, efforts to contact copyright-holders may have been unsuccessful and AQA will be happy to rectify any omissions of acknowledgements. If you have any queries please contact the Copyright Team.

Copyright © 2024 AQA and its licensors. All rights reserved.