AQA

Please write clearly in block capitals.

Centre number | | | | | | Candidate number | | | | |

Surname _____

Forename(s) _____

Candidate signature _____
I declare this is my own work.

GCSE
MATHEMATICS

H

Higher Tier Paper 3 Calculator

Time allowed: 1 hour 30 minutes

Materials
For this paper you must have:
- a calculator
- mathematical instruments.

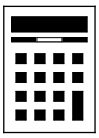

Instructions
- Use black ink or black ball-point pen. Draw diagrams in pencil.
- Fill in the boxes at the top of this page.
- Answer **all** questions.
- You must answer the questions in the spaces provided. Do not write outside the box around each page or on blank pages.
- If you need extra space for your answer(s), use the lined pages at the end of this book. Write the question number against your answer(s).
- Do all rough work in this book. Cross through any work you do not want to be marked.

Information
- The marks for questions are shown in brackets.
- The maximum mark for this paper is 80.
- You may ask for more answer paper, graph paper and tracing paper. These must be tagged securely to this answer book.

Advice
In all calculations, show clearly how you work out your answer.

For Examiner's Use	
Pages	Mark
2–3	
4–5	
6–7	
8–9	
10–11	
12–13	
14–15	
16–17	
18–19	
20–21	
22–23	
24–25	
26	
TOTAL	

Do not write outside the box

Answer **all** questions in the spaces provided.

1 b is 3 more than the square root of a.

Circle the correct equation.

[1 mark]

$b = \sqrt{a} + 3$ $\quad$ $b = \sqrt{a} - 3$ $\quad$ $b = \sqrt{a+3}$ $\quad$ $b = \sqrt{a-3}$

2 Circle the largest number.

[1 mark]

$0.\dot{5}$ $\quad$ 0.55 $\quad$ 0.545 $\quad$ $0.5\dot{4}\dot{5}$

3 A line has equation $3y = 3x - 2$

Circle the coordinates of the intercept of the line with the y-axis.

[1 mark]

(0, 1) $\quad$ (0, –1) $\quad$ $\left(0, \frac{2}{3}\right)$ $\quad$ $\left(0, -\frac{2}{3}\right)$

Do not write outside the box

4 Factorise $x^2 - 64$

Circle your answer.

[1 mark]

$(x + 8)^2$ $(x - 8)^2$ $(x + 8)(x - 8)$ $x(x - 64)$

5 Six positive numbers have

a mean of 10

a range of 19

Four of the numbers are 12 7 15 3

Work out the other two numbers.

[3 marks]

Answer _____ and _____

7

Turn over ►

Do not write outside the box

6 At a country park there is a house, a museum and a garden.

The table shows the prices per person to visit the park.

	Price per person
Garden only	Free
House and museum	£12.50
House only	£8
Museum only	£7

One day, 480 people visit the park.

67 visit the garden **only**.

40% visit the house **and** the museum.

$\frac{3}{8}$ visit the house **only**.

The rest visit the museum **only**.

In total, how much do the 480 people pay to visit the park?

You may use the Venn diagram to help you.

[5 marks]

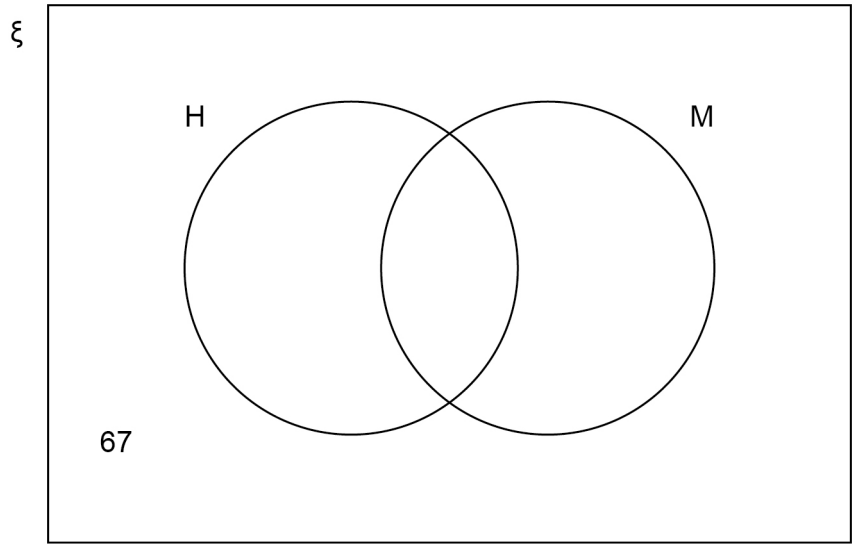

Do not write outside the box

Answer £ _____

7 Jeff and Kaz share £270 in the ratio Jeff : Kaz = 2.6 : 1

How much **more** than Kaz does Jeff get?

[3 marks]

Answer £ _____

8

Do not write outside the box

8 The heel of a shoe exerts a pressure of 198 pounds per square inch.

Convert this pressure into kilograms per square centimetre.

Use

1 pound = 0.45 kilograms

1 square inch = 6.25 square centimetres

[3 marks]

Answer _____ kg/cm^2

Do not write outside the box

9 Rectangle *ABCD* is split into four smaller rectangles.

Two of the smaller rectangles are shaded.

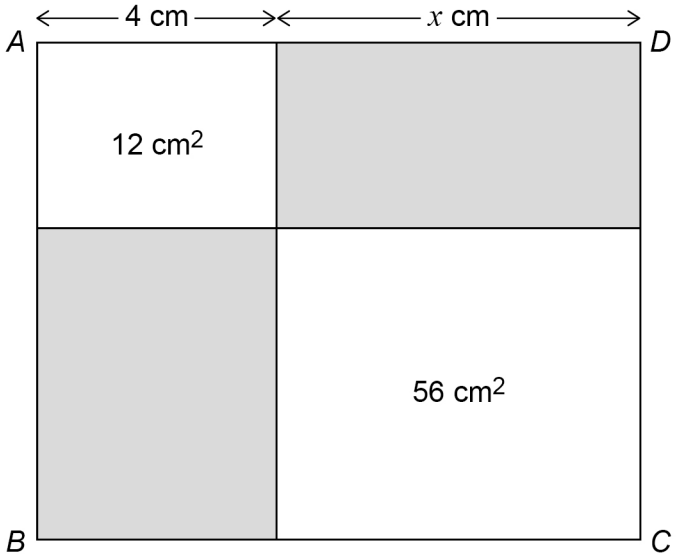

Not drawn accurately

$4 : x = 1 : 2$

For rectangle *ABCD*, work out the ratio shaded area : unshaded area

Give your answer in its simplest form.

[4 marks]

Answer _____ : _____

7

Turn over ►

Do not write outside the box

10 A solid shape is drawn on isometric paper.

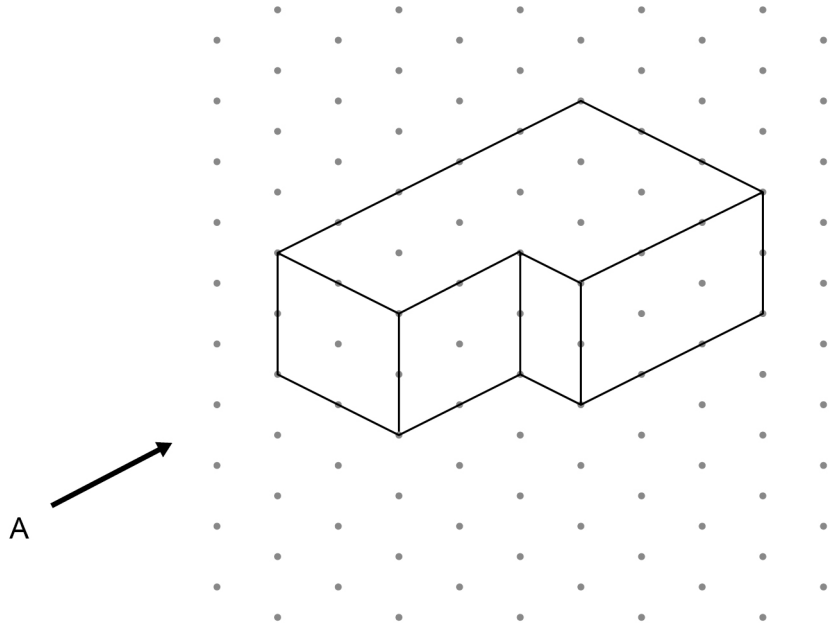

10 (a) On the centimetre grid, draw the elevation of the shape from A.

[1 mark]

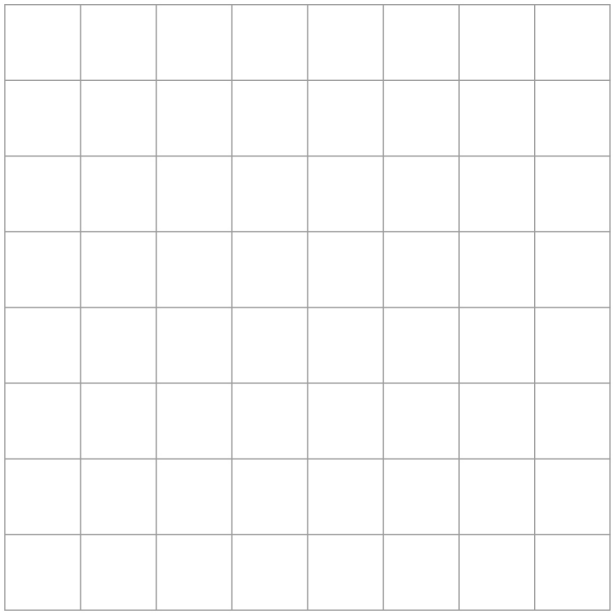

Do not write outside the box

10 (b) On the centimetre grid, draw a plan of the shape.

[1 mark]

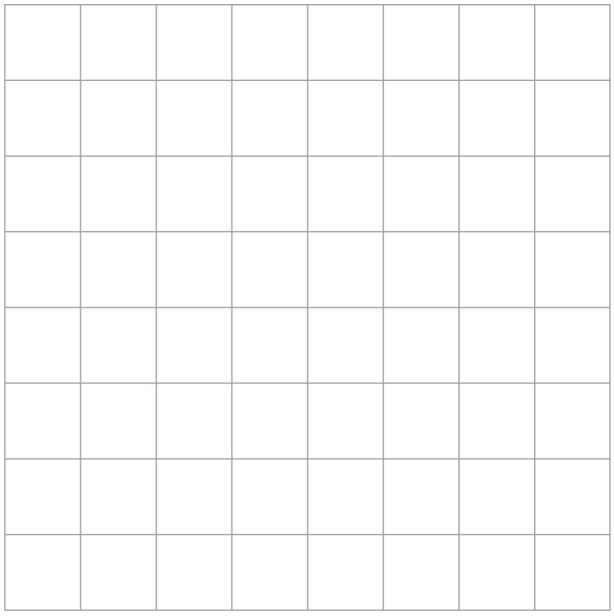

11 Erik thinks of a prime number between 20 and 30

His number is x% of 125

Work out **one** possible value of x.

[3 marks]

Answer _____

5

Turn over ►

Do not write outside the box

12 Part of a regular polygon with 15 sides is shown.

Not drawn accurately

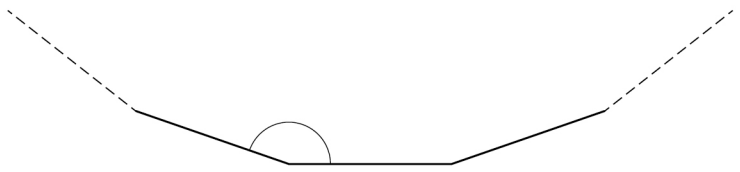

Work out the size of an **interior** angle.

[2 marks]

Answer _____ degrees

Do not write outside the box

13 A box is the shape of half a cylinder on top of a cuboid.

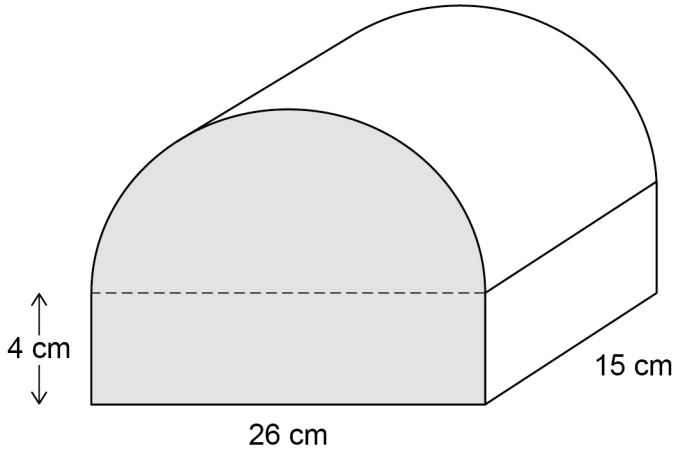

Work out the volume of the box.

[4 marks]

Answer _____ cm^3

6

Turn over ►

Do not write outside the box

14 Phil sells ties.

He increases the original price of each tie by 10% to £13.20

A month later he announces a sale.

Phil says,

"The ties will be back to their original price, because each change was by 10%"

Is he correct?

Tick a box.

☐ Yes ☐ No

Show working to support your answer.

[3 marks]

Do not write outside the box

15 A biased spinner can land on A, B or C.

The table shows the probabilities, in terms of k, of A, B and C.

	A	**B**	**C**
Probability	$0.5k$	$7k - 0.15$	$2.5k$

Work out the probability of B.

[3 marks]

Answer _____

Turn over for the next question

6

Do not write outside the box

16 *P* is the point (2, 14)

Q is the point (6, 8)

R is the point (2, 5)

Use gradients to show that angle *PQR* is **not** a right angle.

[3 marks]

Do not write outside the box

17 $m^2 > 9$

Circle the possible value of m.

[1 mark]

$-2\frac{7}{8}$ 2.8 3 $-\frac{7}{2}$

18 Simplify $w^1 \times w^0$

Circle your answer.

[1 mark]

1 0 w w^2

19 The equation of a circle is $x^2 + y^2 = 11$

Work out the length of the **diameter**.

Circle your answer.

[1 mark]

$\sqrt{11}$ $2\sqrt{11}$ $\sqrt{22}$ 22

Turn over for the next question

6

Do not write outside the box

20 $\frac{a}{b} = 3c$

$\frac{b}{c} = 2$

Work out the value of a when $c = 8$

[3 marks]

Answer _____

Do not write outside the box

21 Here is some information about the ages of babies at a clinic.

Age, x (weeks)	**Frequency**		
$0 \leqslant x < 5$	18		
$5 \leqslant x < 10$	23		
$10 \leqslant x < 20$	17		
$20 \leqslant x < 50$	21		

Draw a histogram to represent the information.

[4 marks]

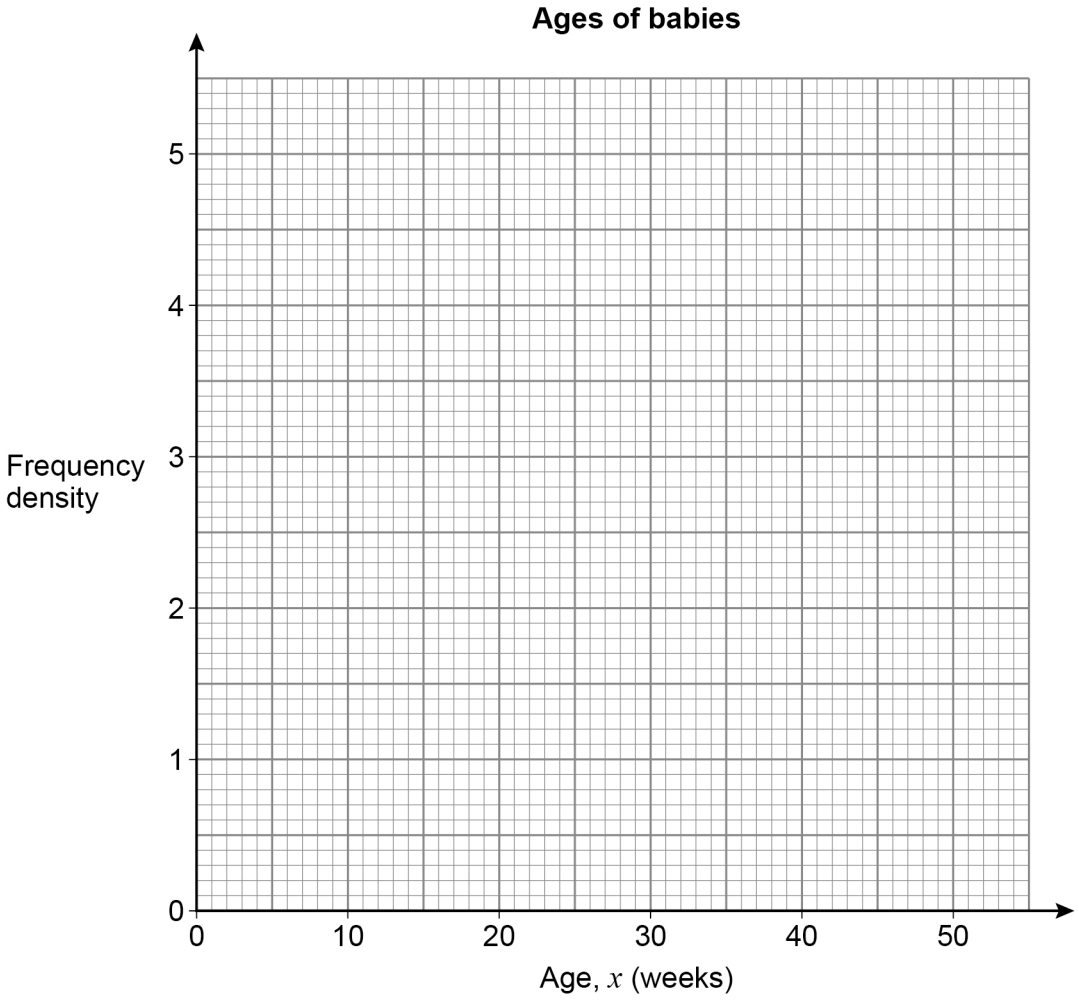

7

Do not write outside the box

22 A sequence of patterns is made using horizontal sticks and vertical sticks.

Pattern 1 Pattern 2 Pattern 3

The table shows the number of horizontal sticks and vertical sticks in each pattern.

Pattern	**Number of horizontal sticks**	**Number of vertical sticks**
1	2	2
2	4	3
3	6	4

What fraction of the total number of sticks in Pattern n are horizontal?

Give your answer in terms of n.

[3 marks]

Answer _____

Do not write outside the box

23 The equation of a curve is $y = 16^x$

23 (a) Circle the point that lies on the curve.

[1 mark]

(2, 32) (32, 2) (2, 256) (256, 2)

23 (b) A different point on the curve has y-coordinate $\frac{1}{16}$

Work out the x-coordinate.

[1 mark]

Answer _____

24 $a^b = 3$ where a is an integer and b is a proper fraction.

Work out **one** possible pair of values of a and b.

[1 mark]

$a =$ _____ $b =$ _____

6

Turn over ►

Do not write outside the box

25 Expand and simplify fully $(x - 3)(x + 2)(x + 5)$

[3 marks]

Answer _____

Do not write outside the box

26 Here are two similar cones.

Cone A

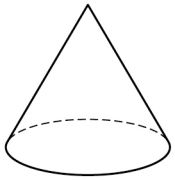

Cone B

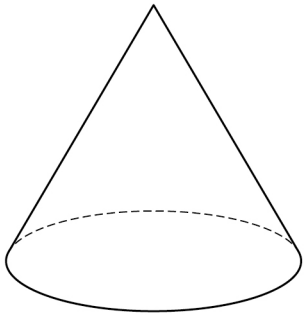

The surface area of cone A is 2 m^2

The surface area of cone B is 4.5 m^2

Work out the ratio radius of cone A : radius of cone B

Give your answer in the form 1 : n

[3 marks]

Answer _____ : _____

6

Turn over ►

Do not write outside the box

27 In the diagram

$\overrightarrow{DE} = \mathbf{a}$

$\overrightarrow{DH} = \mathbf{b}$

$\overrightarrow{HG} = 8\mathbf{b}$

$EX : XH = 3 : 1$

$EF : FG = 1 : 3$

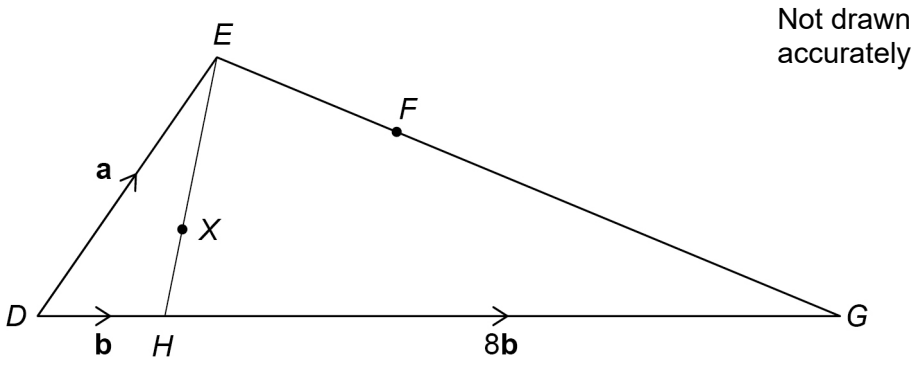

27 (a) Show that $\overrightarrow{DX} = \frac{1}{4}\mathbf{a} + \frac{3}{4}\mathbf{b}$

[2 marks]

Do not write outside the box

27 (b) Is *DXF* a straight line?

Show working to support your answer.

[4 marks]

Turn over for the next question

6

Do not write outside the box

28 $a = 4.72$ to 3 significant figures.

$b = 158$ to 3 significant figures.

Work out the upper bound of $\frac{a}{b}$

You **must** show your working.

[3 marks]

Answer _____

Do not write outside the box

29 *A*, *B* and *C* are three points on the circumference of a circle, centre *O*.

BD and *CD* are tangents to the circle.

ABDC is a kite.

Angle *BDC* is x

Not drawn accurately

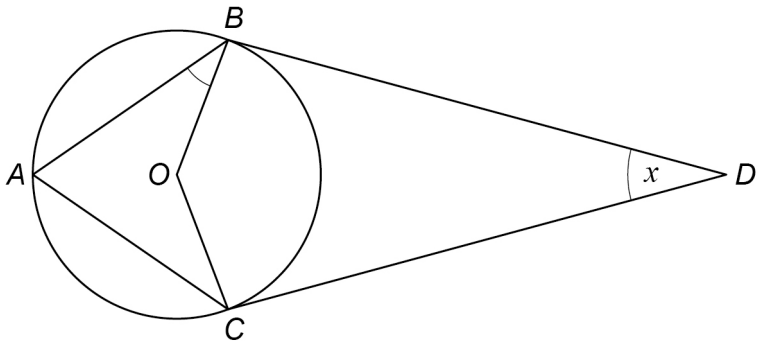

Prove that angle *ABO* is $45° - \frac{x}{4}$

[4 marks]

7

Turn over ►

Do not write outside the box

30 A sphere has radius r cm

An approximate value of r can be found using the iterative formula

$$r_{n+1} = \sqrt{\frac{239}{r_n}}$$

The starting value is $r_1 = 7$

30 (a) Work out the values of r_2 and r_3

[2 marks]

$r_2 =$ _____

$r_3 =$ _____

30 (b) Continue the iteration to work out the radius to 1 decimal place.

[1 mark]

Answer _____ cm

END OF QUESTIONS

3

Do not write outside the box

There are no questions printed on this page

DO NOT WRITE ON THIS PAGE
ANSWER IN THE SPACES PROVIDED

Do not write outside the box

Question number	**Additional page, if required.** **Write the question numbers in the left-hand margin.**

Do not write outside the box

Question number	**Additional page, if required.** **Write the question numbers in the left-hand margin.**

Do not write outside the box

Question number	**Additional page, if required.** **Write the question numbers in the left-hand margin.**

Do not write outside the box

Question number	**Additional page, if required.** **Write the question numbers in the left-hand margin.**

Do not write outside the box

There are no questions printed on this page

DO NOT WRITE ON THIS PAGE
ANSWER IN THE SPACES PROVIDED

Copyright information

For confidentiality purposes, all acknowledgements of third-party copyright material are published in a separate booklet. This booklet is published after each live examination series and is available for free download from www.aqa.org.uk.

Permission to reproduce all copyright material has been applied for. In some cases, efforts to contact copyright-holders may have been unsuccessful and AQA will be happy to rectify any omissions of acknowledgements. If you have any queries please contact the Copyright Team.

Copyright © 2021 AQA and its licensors. All rights reserved.