Please write clearly in block capitals.

Centre number | | | | | | Candidate number | | | | |

Surname _____

Forename(s) _____

Candidate signature _____

GCSE MATHEMATICS

H

Higher Tier Paper 2 Calculator

Thursday 7 November 2019 Morning Time allowed: 1 hour 30 minutes

Materials

For this paper you must have:
- a calculator
- mathematical instruments.

Instructions

- Use black ink or black ball-point pen. Draw diagrams in pencil.
- Fill in the boxes at the top of this page.
- Answer **all** questions.
- You must answer the questions in the spaces provided. Do not write outside the box around each page or on blank pages.
- Do all rough work in this book. Cross through any work you do not want to be marked.

Information

- The marks for questions are shown in brackets.
- The maximum mark for this paper is 80.
- You may ask for more answer paper, graph paper and tracing paper. These must be tagged securely to this answer book.

Advice

In all calculations, show clearly how you work out your answer.

For Examiner's Use	
Pages	Mark
2–3	
4–5	
6–7	
8–9	
10–11	
12–13	
14–15	
16–17	
18–19	
20–21	
22–23	
24–25	
TOTAL	

Do not write outside the box

Answer **all** questions in the spaces provided

1 Expand $4x^2(3x + 5)$

Circle your answer.

[1 mark]

$32x^3$ $12x^3 + 20x^2$ $7x^3 + 9x^2$ $12x^2 + 5$

2 How many millimetres are there in a kilometre?

Circle your answer.

[1 mark]

10^3 10^5 10^6 10^9

3 Circle the number half way between $\frac{7}{12}$ and $\frac{3}{4}$

[1 mark]

$\frac{7}{32}$ $\frac{5}{8}$ $\frac{2}{3}$ $\frac{1}{2}$

Do not write outside the box

4 Here is the sketch of a graph.

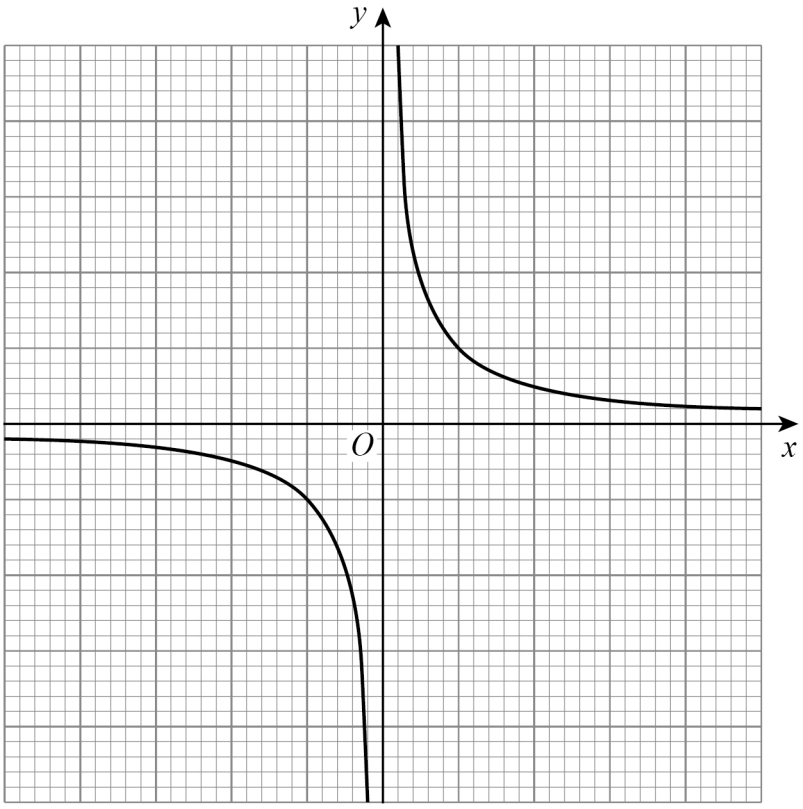

Circle the equation of the graph.

[1 mark]

$y = x$ $\quad$ $y = -x^2$ $\quad$ $y = -x^3$ $\quad$ $y = \frac{1}{x}$

5 Work out the lowest common multiple (LCM) of 120 and 144

[2 marks]

Answer _____

6

Turn over ►

Do not write outside the box

6 The scatter graph shows the best high jump and the best long jump for 15 boys.

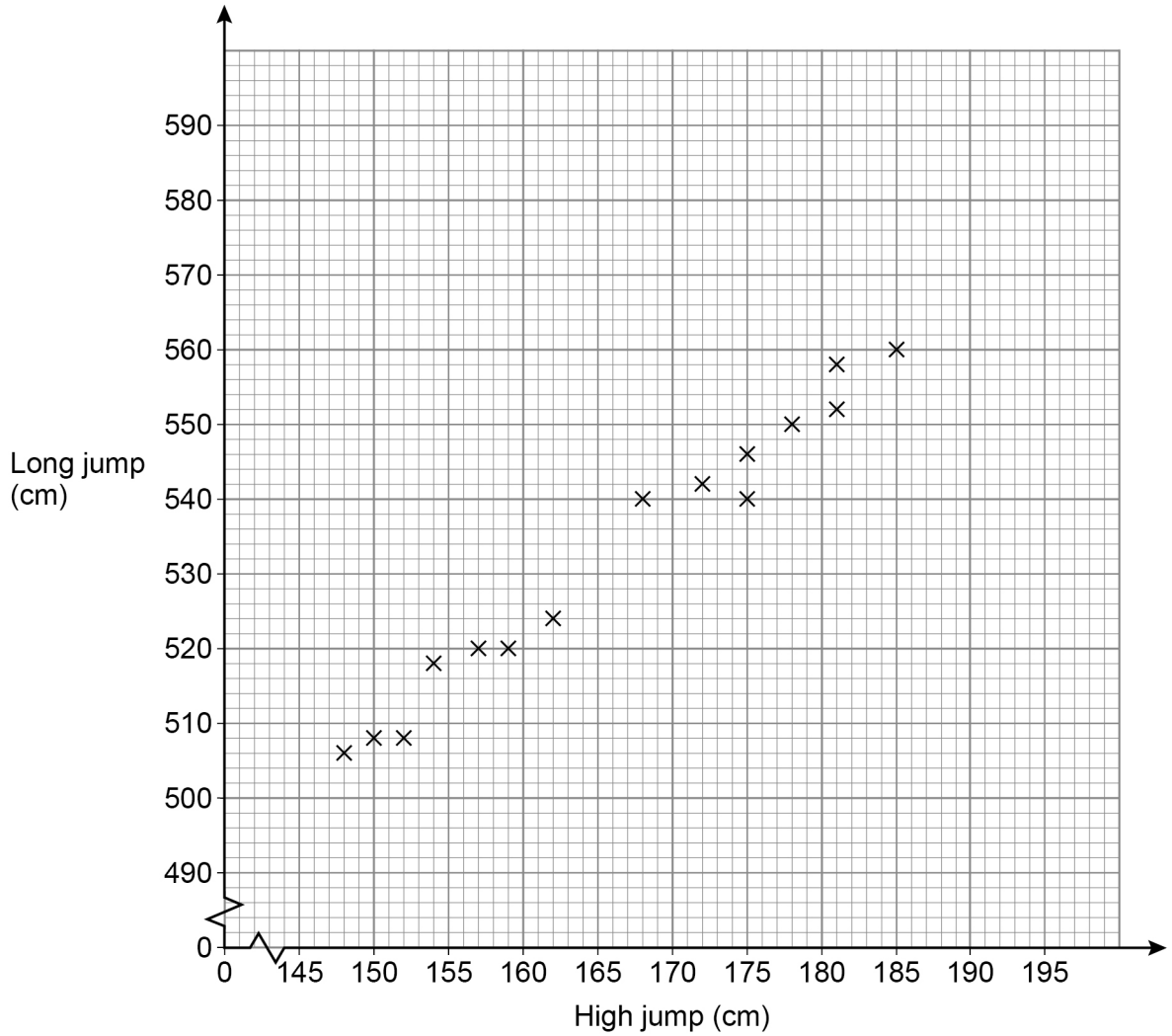

6 (a) Write down the type of correlation shown.

[1 mark]

Answer _____

Do not write outside the box

6 (b) Liam has a best high jump of 166 cm

Use a line of best fit to estimate his best long jump.

[2 marks]

Answer _____ cm

6 (c) Another boy has a best high jump of 195 cm

Give a reason why you should **not** use a line of best fit to estimate his best long jump.

[1 mark]

_____

_____

Turn over for the next question

4

Do not write outside the box

7 A car journey is in two stages.

Stage 1 The car travels 110 miles in 2 hours.

Stage 2 The car travels 44 miles at the same average speed as Stage 1

Work out the time for Stage 2

Give your answer in minutes.

[3 marks]

Answer _____ minutes

8 Here is an identity.

$$a(3x - 10) \equiv 21x + 2b$$

Work out the values of a and b.

[3 marks]

$a =$ _____ $b =$ _____

Do not write outside the box

9 *J* and *K* are ships.

P is a port.

J is due South of *P*.

Angle *JPK* = 56°

JP = *KP*

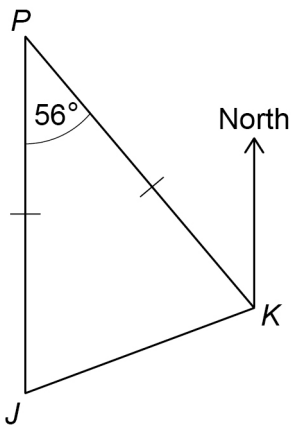

Not drawn accurately

Work out the bearing of *J* from *K*.

[3 marks]

Answer _____ °

Turn over for the next question

9

Do not write outside the box

10 The 5th term of a linear sequence is 17

The 6th term of the sequence is 21

Work out the 100th term of the sequence.

[3 marks]

Answer _____

11 The value of a house is £120 000

The value is expected to increase by 5% each year.

Work out the expected value after 4 years.

Give your answer to 2 significant figures.

You **must** show your working.

[4 marks]

Answer £_____

Do not write outside the box

12 An isosceles triangle has base 16 cm and perpendicular height 15 cm

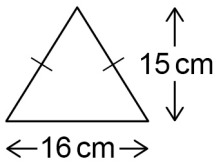

Not drawn accurately

Some of these triangles are used to make a large triangle.

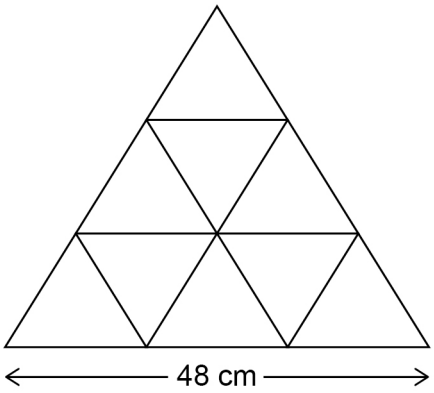

Not drawn accurately

Work out the perimeter of the large triangle.

[4 marks]

Answer _____ cm

11

Turn over ►

Do not write outside the box

13 200 people recorded the time they spent on social media one day.

The table shows the results.

Time, t (mins)	**Frequency**	**Midpoint**	
$0 \leqslant t < 30$	24		
$30 \leqslant t < 50$	76		
$50 \leqslant t < 60$	52		
$60 \leqslant t < 90$	48		
	Total = 200		

13 (a) Work out an estimate of the mean time.

[3 marks]

Answer _____ mins

Do not write outside the box

13 (b) Draw a histogram to represent the results.

[4 marks]

Time, t (mins)	Frequency	Class width	
$0 \leqslant t < 30$	24		
$30 \leqslant t < 50$	76		
$50 \leqslant t < 60$	52		
$60 \leqslant t < 90$	48		

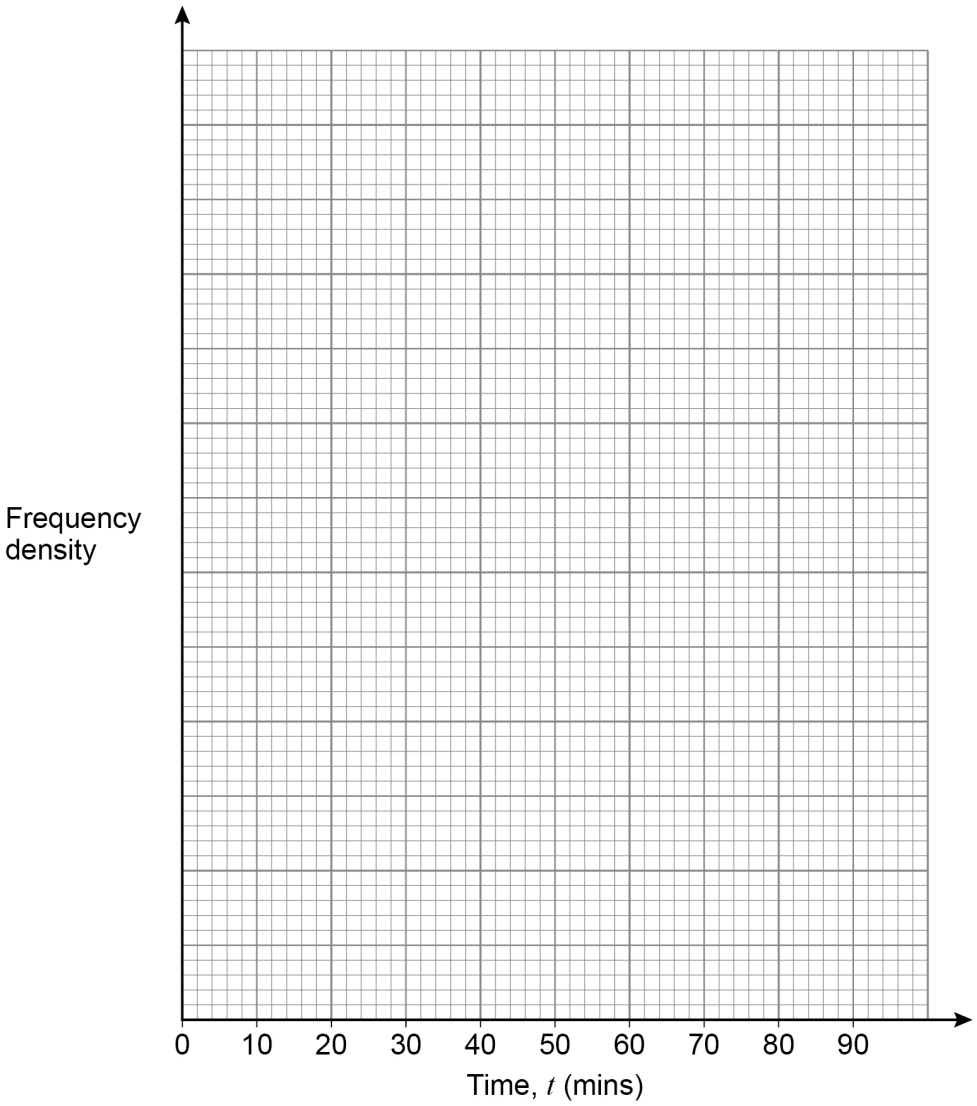

7

Do not write outside the box

14 Ralf has an iron.

He models the base as a triangle joined to a trapezium.

Not drawn accurately

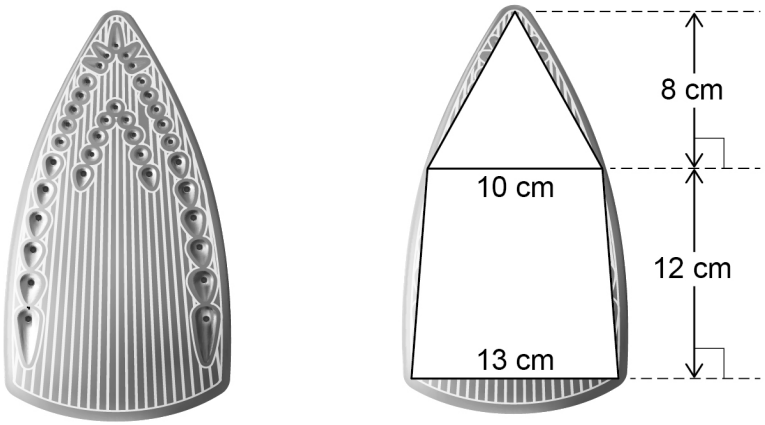

14 (a) The iron applies a force of 25 newtons (N)

$$\text{pressure} = \frac{\text{force}}{\text{area}}$$

Work out the pressure using Ralf's model.

[4 marks]

Answer _____ N/cm^2

Do not write outside the box

14 (b) Is the actual pressure greater than, equal to or less than your answer to part (a)?

Tick **one** box.

☐ greater than ☐ equal to ☐ less than

Give a reason for your answer.

[2 marks]

15 Rearrange $y = \sqrt{w^3}$ to make w the subject.

Circle your answer.

[1 mark]

$w = y^6$ $w = \sqrt[3]{y^2}$ $w = \sqrt{y^3}$ $w = y^5$

Turn over for the next question

7

Do not write outside the box

16 (a) Show that $a\%$ of $b = b\%$ of a

[1 mark]

16 (b) Rosie says,

"160% of 40 = 140% of 60 because $a\%$ of $b = b\%$ of a"

Is she correct?

Tick a box.

☐ Yes ☐ No

Give a reason for your answer.

[1 mark]

Do not write outside the box

17 A packet contains 80 sweets.

The flavour of each sweet is lemon, orange or apple.

A sweet is taken at random.

17 (a) P(lemon or orange) $\leqslant 0.85$

Work out the minimum possible number of **apple** sweets in the packet.

[2 marks]

Answer _____

17 (b) P(lemon or apple) < 0.71

There are 31 lemon sweets.

Work out the maximum possible number of **apple** sweets in the packet.

[2 marks]

Answer _____

6

Turn over ►

Do not write outside the box

18 Kate has the following question for homework.

The net of a box is made by cutting four squares from a piece of cardboard.
The cardboard is a rectangle with width x cm and length $(x + 5)$ cm
Each square has side length 10 cm
The area of the net is 1000 cm^2
Work out the value of x.

Not drawn accurately

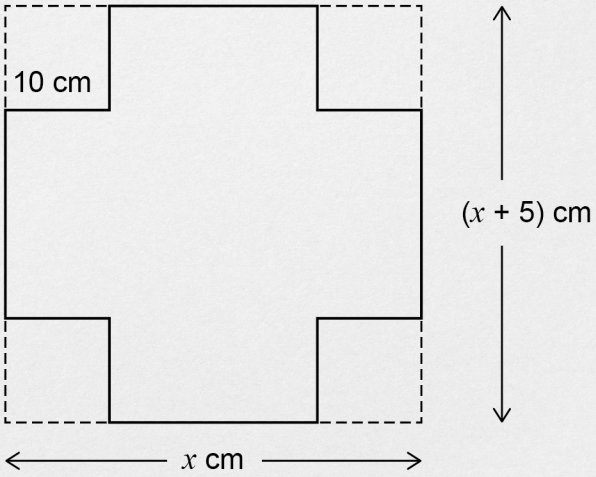

18 (a) Show that Kate can form the equation $x^2 + 5x - 1400 = 0$

[3 marks]

Do not write outside the box

18 (b) Kate correctly factorises the equation to get $(x + 40)(x - 35) = 0$

Her answer to the homework question is $x = -40$ or $x = 35$

Is her answer correct?

Tick a box.

☐ Yes ☐ No

Give a reason for your answer.

[1 mark]

19 Circle the word that describes the graph $y = \sin x$

[1 mark]

periodic exponential cubic quadratic

20 (7, 28) is a point on the graph $y = f(x)$

Circle the point which **must** be on the graph $y = f(x) + 2$

[1 mark]

(7, 26) (7, 30) (5, 28) (9, 28)

6

Turn over ►

Do not write outside the box

21 n is the middle integer of three consecutive positive integers.

The three integers are multiplied to give a product.

n is then added to the product.

Prove that the result is a cube number.

[4 marks]

Do not write outside the box

22 Here is a sketch of a distance-time graph.

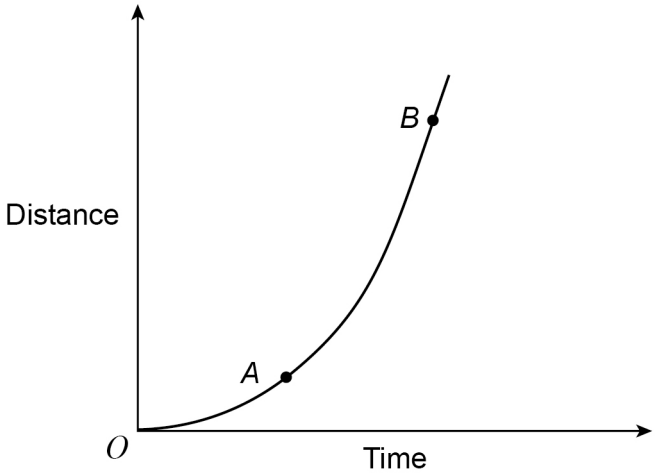

Which of these represents the average speed between *A* and *B*?

Tick **one** box.

[1 mark]

☐ The gradient of the tangent at *A*

☐ The gradient of the tangent at *B*

☐ The gradient of the chord from *A* to *B*

☐ The gradient of the chord from O to *B*

Turn over for the next question

5

Do not write outside the box

23 Here are three similar cuboids, A, B and C.

A has length 5 cm, width 2 cm and height 3 cm

B has length 10 cm

C has length x cm

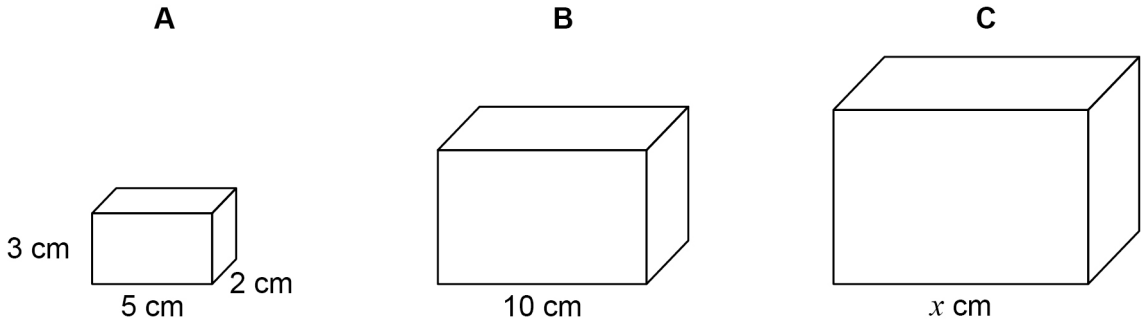

23 (a) The total surface area of A is 62 cm^2

Tim wants to work out the total surface area of B.

Here is his working.

$$10 \div 5 = 2$$
$$62 \times 2 = 124$$
$$\text{Total surface area of B} = 124 \text{ cm}^2$$

Make **one** criticism of Tim's method.

[1 mark]

Do not write outside the box

23 (b) Volume of A $\times \frac{125}{8}$ = Volume of C

Work out the value of x.

[3 marks]

Answer _____

Turn over for the next question

4

Do not write outside the box

24 Here are two inequalities.

$$-2 \leqslant x \leqslant 3$$

$$9 \leqslant x + y \leqslant 11$$

x and y are integers.

Work out the **greatest** possible value of $y - x$

[3 marks]

Answer _____

Do not write outside the box

25 C, D and E are points on a circle.

$CE = DE$

The tangent at D is shown.

ACD and BCE are straight lines.

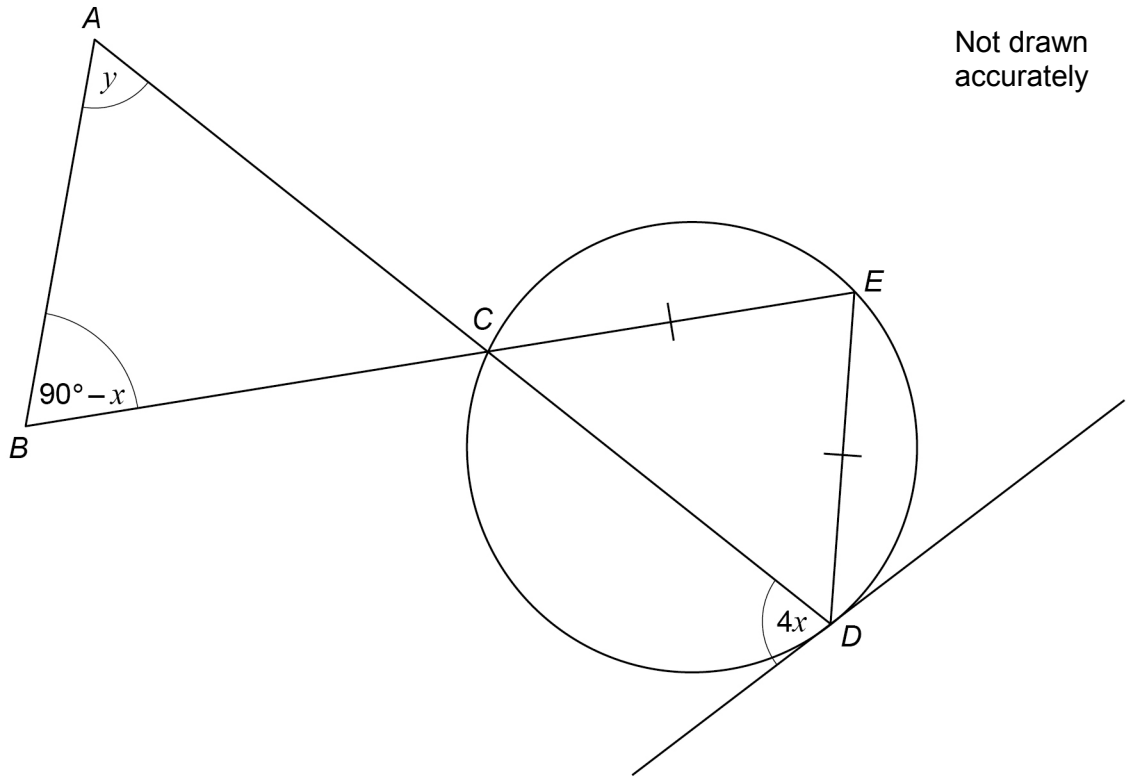

Prove that $y = 3x$

[4 marks]

7

Turn over ►

Do not write outside the box

26 P, Q and R have positive values.

P is directly proportional to the square of Q.

When $P = 1.25$, $Q = 0.5$

Q is inversely proportional to R.

When $Q = 0.5$, $R = 6$

Work out the value of R when $P = 0.8$

[5 marks]

Answer _____

Do not write outside the box

27 $x_{n+1} = \sqrt[3]{3x_n + 7}$

Use a starting value of $x_1 = 2$ to work out a solution to $x = \sqrt[3]{3x + 7}$

Give your answer to 3 decimal places.

[3 marks]

Answer _____

END OF QUESTIONS

8

Do not write outside the box

There are no questions printed on this page

DO NOT WRITE ON THIS PAGE
ANSWER IN THE SPACES PROVIDED

Do not write outside the box

There are no questions printed on this page

DO NOT WRITE ON THIS PAGE
ANSWER IN THE SPACES PROVIDED

Do not write outside the box

There are no questions printed on this page

DO NOT WRITE ON THIS PAGE
ANSWER IN THE SPACES PROVIDED

Copyright information

For confidentiality purposes, from the November 2015 examination series, acknowledgements of third-party copyright material are published in a separate booklet rather than including them on the examination paper or support materials. This booklet is published after each examination series and is available for free download from www.aqa.org.uk after the live examination series.

Permission to reproduce all copyright material has been applied for. In some cases, efforts to contact copyright-holders may have been unsuccessful and AQA will be happy to rectify any omissions of acknowledgements. If you have any queries please contact the Copyright Team, AQA, Stag Hill House, Guildford, GU2 7XJ.

Copyright © 2019 AQA and its licensors. All rights reserved.