Please write clearly in block capitals.

Centre number | | | | | | Candidate number | | | | |

Surname _____

Forename(s) _____

Candidate signature _____

GCSE MATHEMATICS

H

Higher Tier Paper 3 Calculator

Monday 12 November 2018 Morning Time allowed: 1 hour 30 minutes

Materials

For this paper you must have:
- a calculator
- mathematical instruments.

Instructions

- Use black ink or black ball-point pen. Draw diagrams in pencil.
- Fill in the boxes at the top of this page.
- Answer **all** questions.
- You must answer the questions in the spaces provided. Do not write outside the box around each page or on blank pages.
- Do all rough work in this book. Cross through any work you do not want to be marked.

Information

- The marks for questions are shown in brackets.
- The maximum mark for this paper is 80.
- You may ask for more answer paper, graph paper and tracing paper. These must be tagged securely to this answer book.

Advice

In all calculations, show clearly how you work out your answer.

For Examiner's Use	
Pages	Mark
2–3	
4–5	
6–7	
8–9	
10–11	
12–13	
14–15	
16–17	
18–19	
20–21	
22–23	
24–25	
26	
TOTAL	

Do not write outside the box

Answer **all** questions in the spaces provided

1 A shape is translated by the vector $\begin{pmatrix} 0 \\ 4 \end{pmatrix}$

In which direction does the shape move?

Circle your answer.

[1 mark]

up down left right

2 What is 1.75 kilometres as a fraction of 700 metres?

Circle your answer.

[1 mark]

$\frac{5}{2}$ $\frac{1}{4}$ $\frac{4}{1}$ $\frac{2}{5}$

3 The first 4 terms of a linear sequence are

3 11 19 27

Circle the expression for the nth term.

[1 mark]

$8 - 5n$ $n + 8$ $8n + 3$ $8n - 5$

Do not write outside the box

4 Work out the lowest common multiple (LCM) of 20, 30 and 40

Circle your answer.

[1 mark]

10 120 240 24 000

5 The length of a table is 110 cm to the nearest cm

Complete the error interval.

[2 marks]

_____ cm $\leqslant$ length $<$ _____ cm

Turn over for the next question

6

Do not write outside the box

6 A music festival has taken place each year from 2011

The table shows the number of people who attended each year.

Year	2011	2012	2013	2014	2015	2016	2017	2018
Number of people	350	583	906	1471	2023	2612	3251	3780

The festival organisers draw a time series graph to represent the data.

The first four years have been plotted.

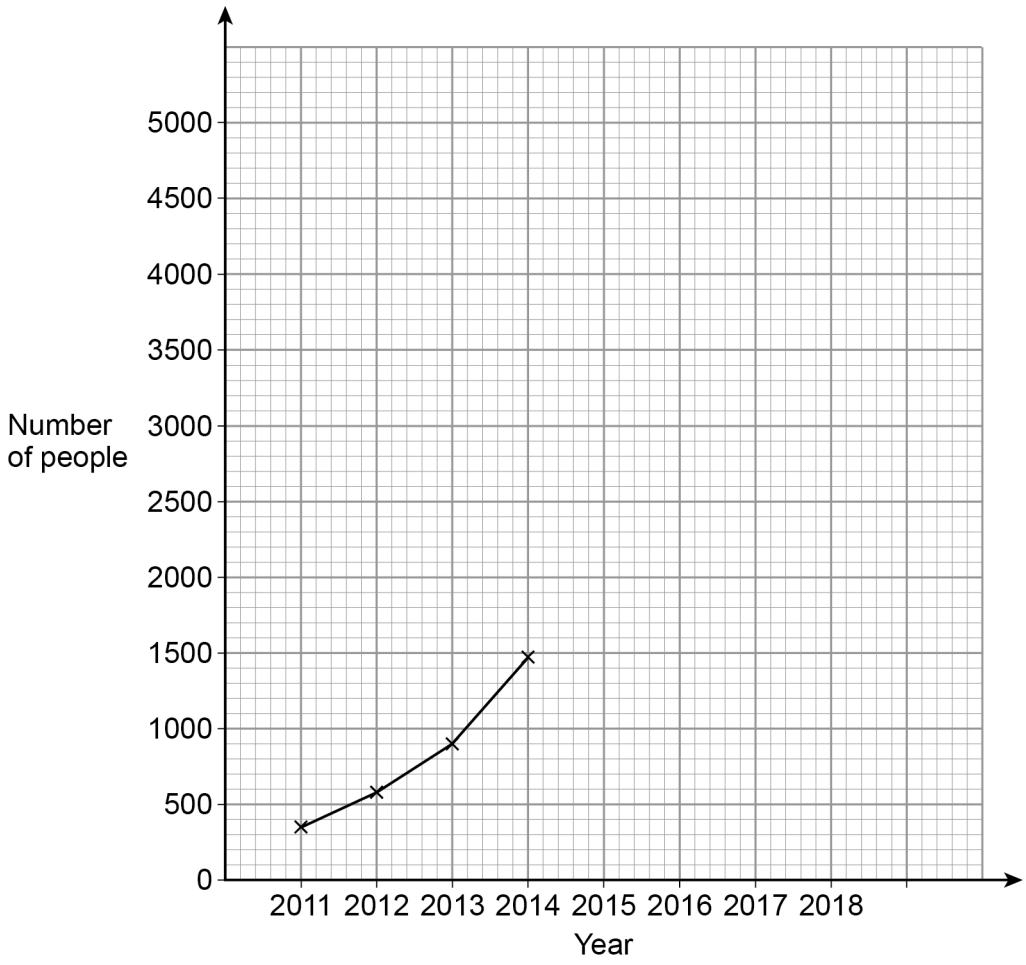

Do not write outside the box

6 (a) Complete the graph.

[2 marks]

6 (b) Use the graph to estimate the number of people who will attend the festival in 2019

[2 marks]

Answer _____

Turn over for the next question

4

Do not write outside the box

7 $k = n^2 + 9n + 1$

Mo says,

"k will be a prime number for all integer values of n from 1 to 9"

Show that Mo is wrong.

You **must** show that your value of k is **not** prime.

[3 marks]

Do not write outside the box

8 Doug owes an amount of £600

He wants to pay off this amount in five months.

He says,

"Each month, I will pay back 20% of the amount I still owe."

Show working to check if his method is correct.

[3 marks]

Turn over for the next question

6

Do not write outside the box

9 A motor racing circuit consists of

two parallel straight sections, each of length 0.75 km

a semicircle of diameter 0.9 km

three equal, smaller semicircles.

Not drawn accurately

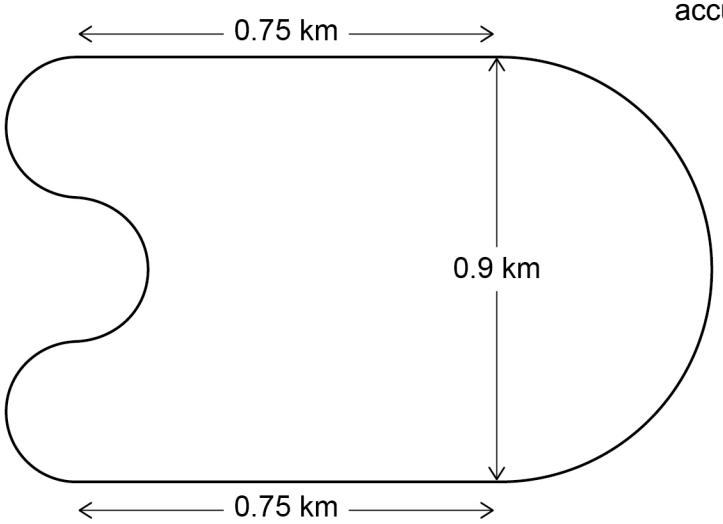

The length of a motor race must be greater than 305 km

What is the lowest number of **full** laps needed at this circuit?

You **must** show your working.

[5 marks]

Answer _____

Do not write outside the box

10 Solve $8 > 3 - \frac{1}{2}x$

[2 marks]

Answer _____

11 Use trigonometry to work out the size of angle x.

[2 marks]

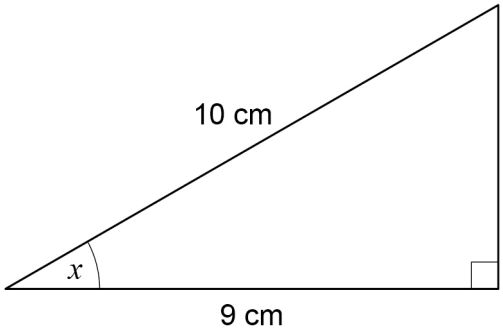

Not drawn accurately

Answer _____ degrees

9

Turn over ►

Do not write outside the box

12 Lewis wants to draw the graph $y = x^3$ for values of x from –2 to 2

Here is his graph.

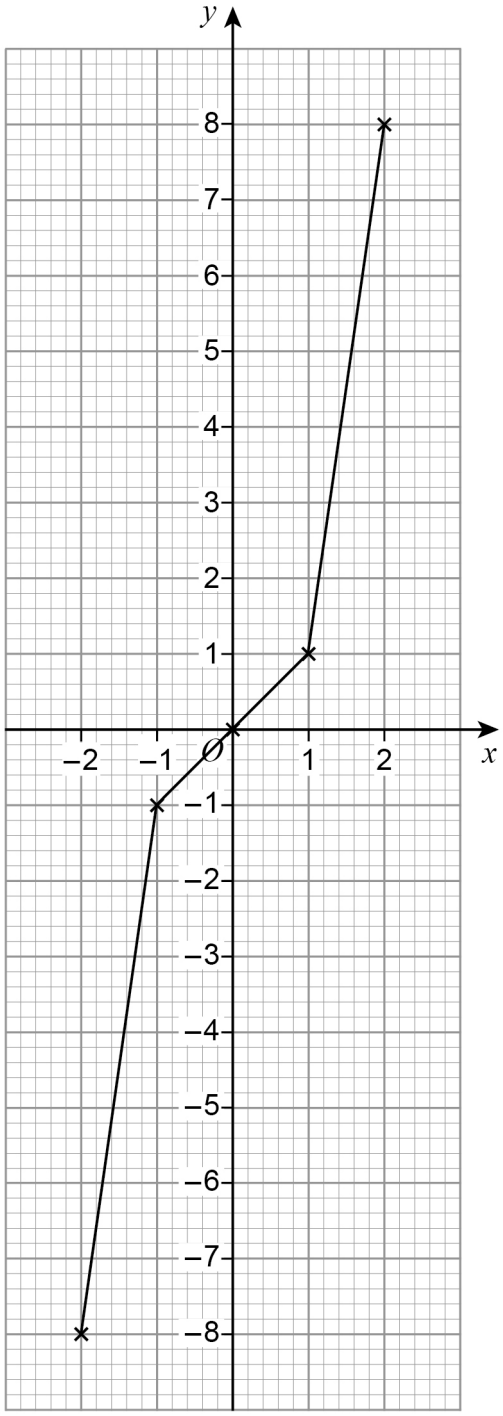

Make **one** criticism of his graph.

[1 mark]

Do not write outside the box

13 The probability of Heads when a biased coin is thrown is 0.6

The coin is thrown 500 times.

Circle the expected number of Tails.

[1 mark]

20 200 250 300

14 The mean mass of a squad of 19 hockey players is 82 kg

A player of mass 93 kg joins the squad.

Work out the mean mass of the squad now.

[3 marks]

Answer _____ kg

5

Turn over ►

Do not write outside the box

15 A company makes two types of lampshade using fabric on wire frames.

Lampshade A

Fabric is used to make the curved surface of a cylinder.

The cylinder has radius 8 cm and height 22 cm

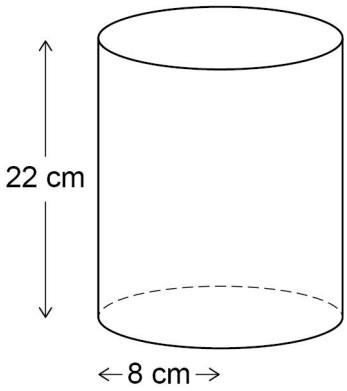

Lampshade B

Fabric is used to make the four triangular faces of a pyramid.

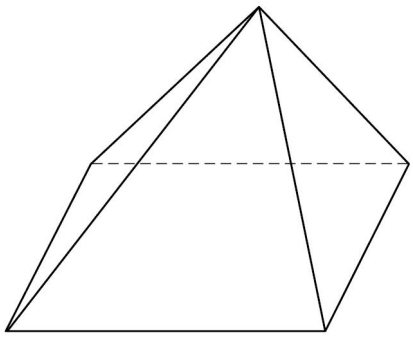

Each triangular face has base 15 cm and perpendicular height 24 cm

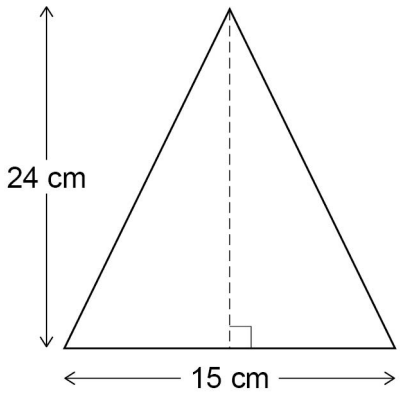

Not drawn accurately

Do not write outside the box

Cost of fabric	£400 per square metre
Other costs for A	£3.50 per lampshade
Other costs for B	£7.50 per lampshade

Work out the ratio cost of one lampshade A : cost of one lampshade B

Give your answer in the form n : 1

[5 marks]

Answer _____ : _____

5

Turn over ►

Do not write outside the box

16 In a running club there are 50 females and 80 males.

If a female is chosen at random, the probability she has blue eyes is 0.38

If a male is chosen at random, the probability he has blue eyes is 0.6

One person is chosen at random.

Show that the probability the person has blue eyes is **more than** 0.5

[4 marks]

17 $w = \dfrac{3}{5\sqrt{x}}$

Circle the expression for w^2

[1 mark]

$\dfrac{6}{10x^2}$ $\dfrac{9}{25x^2}$ $\dfrac{6}{10x}$ $\dfrac{9}{25x}$

Do not write outside the box

18 Here is some information about the ages of people at a concert.

Age, x (years)	**Frequency**
$10 \leqslant x < 15$	8
$15 \leqslant x < 25$	24
$25 \leqslant x < 40$	30
$40 \leqslant x < 70$	39

Draw a histogram to represent the information.

[3 marks]

Ages of people at a concert

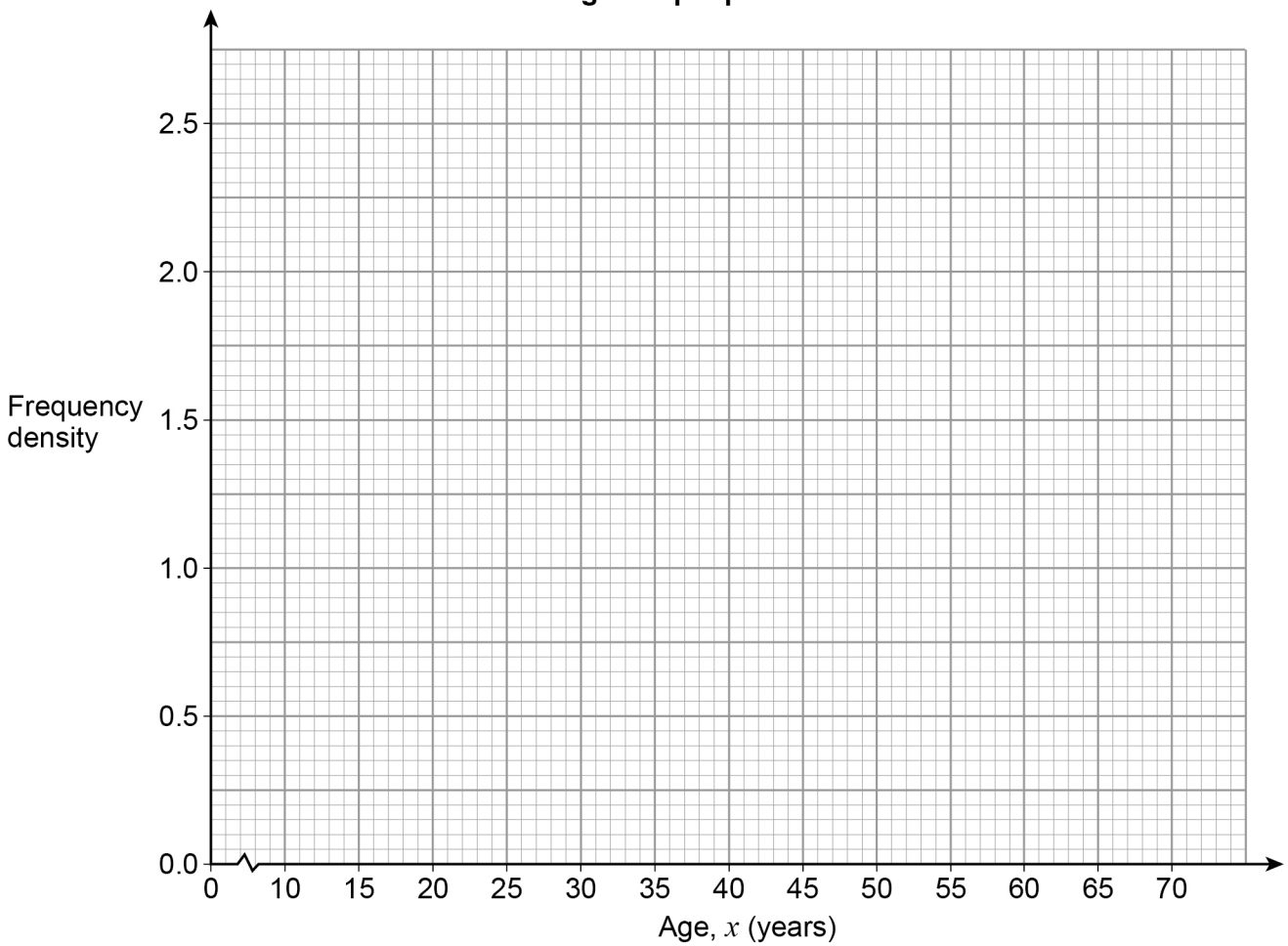

8

Turn over ►

Do not write outside the box

19 The length of a roll of ribbon is 30 metres, correct to the nearest half-metre.

A piece of length 5.8 metres, correct to the nearest 10 centimetres, is cut from the roll.

Work out the maximum possible length of ribbon left on the roll.

[3 marks]

Answer _____ metres

Do not write outside the box

20 Curve P has equation $y = 2(x - 1)^2 - 5$

Curve Q is a reflection in the y-axis of curve P.

Work out the equation of curve Q.

Give your answer in the form $y = ax^2 + bx + c$ where a, b and c are integers.

[3 marks]

Answer _____

Turn over for the next question

6

Do not write outside the box

21 Priya and Joe travel the same 16.8 km route.

Priya starts at 9.00 am and walks at a constant speed of 6 km/h

Joe starts at 9.30 am and runs at a constant speed.

Joe overtakes Priya at 10.20 am

At what time does Joe finish the route?

[5 marks]

Answer _____

Do not write outside the box

22 An approximate solution to an equation is found using the iterative formula

$$x_{n+1} = \frac{(x_n)^3 - 2}{10} \quad \text{with} \quad x_1 = -1$$

22 (a) Work out the values of x_2 and x_3

[2 marks]

$x_2 =$ _____

$x_3 =$ _____

22 (b) Work out the solution to 5 decimal places.

[1 mark]

$x =$ _____

8

Turn over ►

Do not write outside the box

23 The diagram shows the side view of a step ladder with a horizontal strut of length 48 cm

The strut is one third of the way up the ladder.

The symmetrical cross section of the ladder shows two similar triangles.

Not drawn accurately

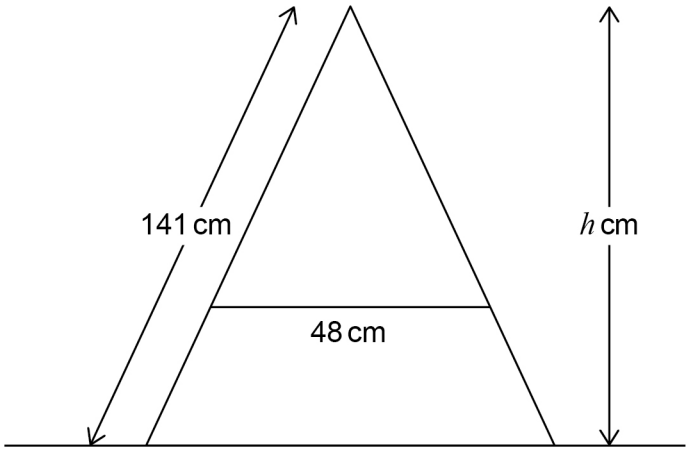

Work out the vertical height, h cm, of the ladder.

[5 marks]

Answer _____ cm

Do not write outside the box

24

Volume of a sphere = $\frac{4}{3}\pi r^3$ where r is the radius

Volume of a cone = $\frac{1}{3}\pi r^2 h$ where r is the radius and h is the perpendicular height

A sphere has radius $2x$ cm

A cone has

radius $3x$ cm

perpendicular height h cm

The sphere and the cone have the same volume.

Work out radius of cone : perpendicular height of cone

Give your answer in the form $a : b$ where a and b are integers.

[4 marks]

Answer _____ : _____

9

Turn over ►

Do not write outside the box

25 *ABCD* is a quadrilateral.

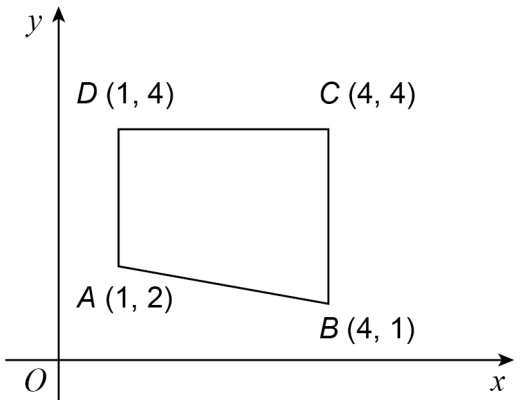

Not drawn accurately

The quadrilateral is reflected in the line $x = 4$

Which vertices are invariant?

Circle your answer.

[1 mark]

A and *D* *C* and *D* *B* and *C* *B* and *D*

Do not write outside the box

26 $f(x) = \dfrac{2x+3}{x-4}$

Work out $f^{-1}(x)$

[4 marks]

Answer _____

Turn over for the next question

5

Do not write outside the box

27 The line $y = 3x + p$ and the circle $x^2 + y^2 = 53$ intersect at points A and B.

p is a positive integer.

27 (a) Show that the x-coordinates of points A and B satisfy the equation

$$10x^2 + 6px + p^2 - 53 = 0$$

[3 marks]

Do not write outside the box

27 (b) The coordinates of *A* are (2, 7)

Work out the coordinates of *B*.

You **must** show your working.

[5 marks]

Answer (_____ , _____)

Turn over for the next question

8

Do not write outside the box

28 Here is a sketch of a quadratic curve.

The turning point is (3, –2)

Not drawn accurately

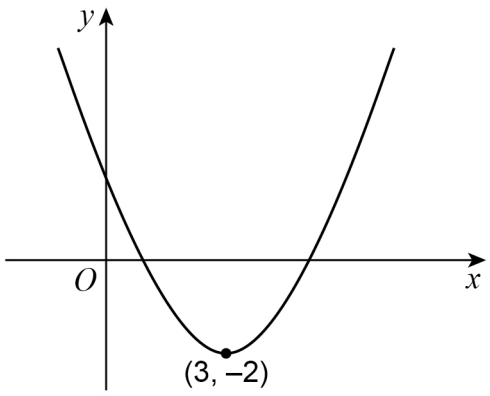

Circle the correct statement about the gradient of the curve for $x < 3$

[1 mark]

gradient is positive

gradient is negative

gradient is zero

gradient could be any value

END OF QUESTIONS

1

Do not write outside the box

There are no questions printed on this page

DO NOT WRITE ON THIS PAGE
ANSWER IN THE SPACES PROVIDED

Do not write outside the box

There are no questions printed on this page

DO NOT WRITE ON THIS PAGE
ANSWER IN THE SPACES PROVIDED

Copyright information

For confidentiality purposes, from the November 2015 examination series, acknowledgements of third-party copyright material will be published in a separate booklet rather than including them on the examination paper or support materials. This booklet is published after each examination series and is available for free download from www.aqa.org.uk after the live examination series.

Permission to reproduce all copyright material has been applied for. In some cases, efforts to contact copyright-holders may have been unsuccessful and AQA will be happy to rectify any omissions of acknowledgements. If you have any queries please contact the Copyright Team, AQA, Stag Hill House, Guildford, GU2 7XJ.

Copyright © 2018 AQA and its licensors. All rights reserved.