Please write clearly in block capitals.

Centre number | | | | | | Candidate number | | | | |

Surname _____

Forename(s) _____

Candidate signature _____

GCSE MATHEMATICS

H

Higher Tier Paper 2 Calculator

Thursday 6 June 2019 Morning Time allowed: 1 hour 30 minutes

Materials

For this paper you must have:
- a calculator
- mathematical instruments.

Instructions

- Use black ink or black ball-point pen. Draw diagrams in pencil.
- Fill in the boxes at the top of this page.
- Answer **all** questions.
- You must answer the questions in the spaces provided. Do not write outside the box around each page or on blank pages.
- Do all rough work in this book. Cross through any work you do not want to be marked.

Information

- The marks for questions are shown in brackets.
- The maximum mark for this paper is 80.
- You may ask for more answer paper, graph paper and tracing paper. These must be tagged securely to this answer book.

Advice

In all calculations, show clearly how you work out your answer.

For Examiner's Use	
Pages	Mark
2–3	
4–5	
6–7	
8–9	
10–11	
12–13	
14–15	
16–17	
18–19	
20–21	
22–23	
24–25	
TOTAL	

Do not write outside the box

Answer **all** questions in the spaces provided

1 Circle the point that lies on the curve $y = x^2 - 4x + 1$

[1 mark]

(–1, 4) (–1, –4) (–1, –2) (–1, 6)

2 The height of a tree is 12 metres, correct to the nearest metre.

Circle the error interval.

[1 mark]

11.5 m $\leqslant$ height $<$ 12.5 m

11.5 m $\leqslant$ height $\leqslant$ 12.5 m

11.5 m $<$ height $\leqslant$ 12.5 m

11.5 m $<$ height $<$ 12.5 m

Do not write outside the box

3 $2a$ is five times bigger than b.

Circle the ratio $a : b$

[1 mark]

10 : 1 1 : 10 5 : 2 2 : 5

4

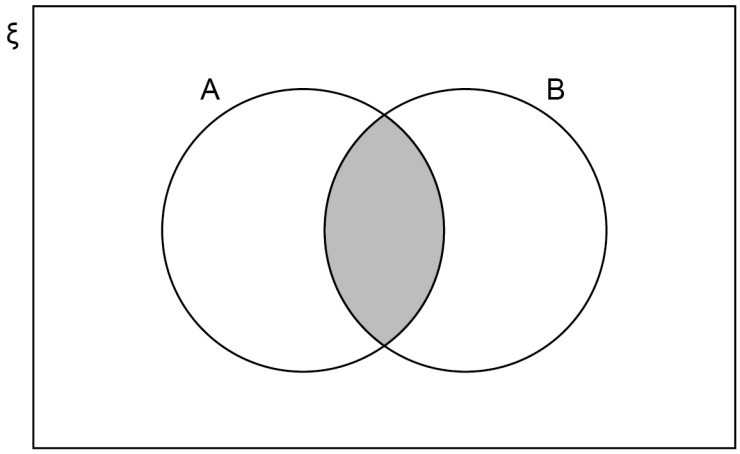

Which of these represents the shaded region?
Circle your answer.

[1 mark]

$A \cup B$ $(A \cap B)'$ $A \cap B$ $A' \cup B'$

Turn over for the next question

4

Do not write outside the box

5 Using ruler and compasses, show the region inside the grid that is

less than 4 cm from *A*

and

nearer to *B* than to *C*.

Label the region R.

Show all your construction lines.

[3 marks]

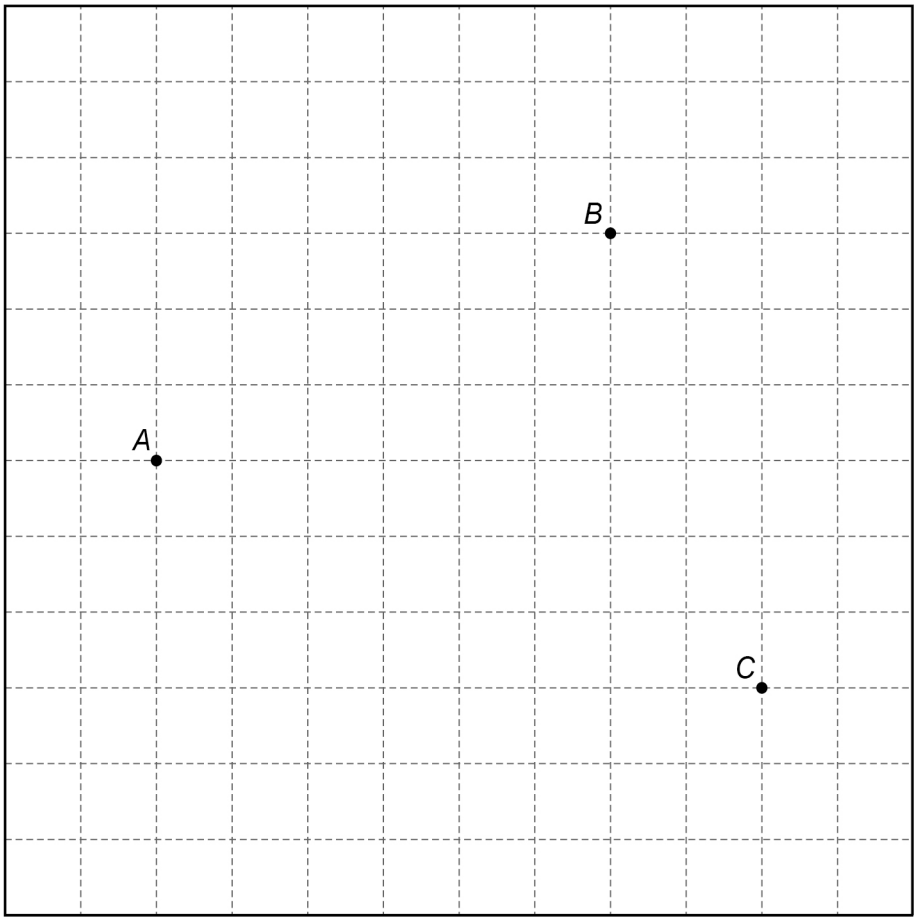

Do not write outside the box

6 Beth drives 200 miles in 4 hours.

She drives the first 18 miles at an average speed of 36 mph

Work out her average speed for the rest of the journey.

[3 marks]

Answer _____ mph

Turn over for the next question

6

Do not write outside the box

7 The diagram shows rectangle *ABDE* and right-angled triangle *ABC*.

AC = 17 cm

BC = 8 cm

Not drawn accurately

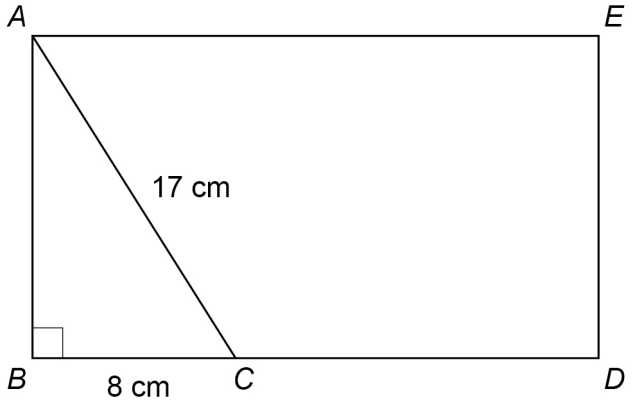

BC : *CD* = 1 : 2

Work out the area of rectangle *ABDE*.

[4 marks]

Answer _____ cm^2

Do not write outside the box

8 On the axes, sketch the curve $y = x^3 - 2$

You **must** show the coordinates of the y-intercept.

[2 marks]

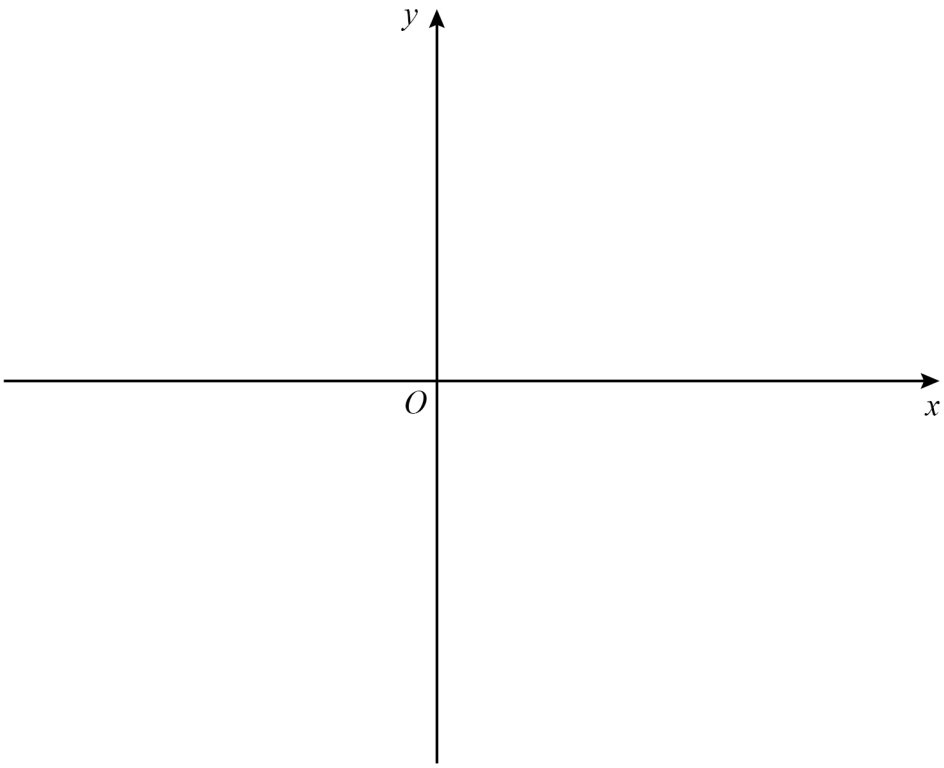

Turn over for the next question

6

Do not write outside the box

9 In a sport, injury time is added time played at the end of a match.

The table shows the injury time, t (minutes) played in 380 matches.

Injury time, t (minutes)	**Frequency**
$0 < t \leqslant 2$	59
$2 < t \leqslant 4$	158
$4 < t \leqslant 6$	106
$6 < t \leqslant 8$	45
$8 < t \leqslant 10$	12

9 (a) Circle the **two** words that describe the data.

[1 mark]

continuous discrete grouped ungrouped

9 (b) Which class interval contains the median?

You **must** show your working.

[2 marks]

Answer _____ $< t \leqslant$ _____

Do not write outside the box

9 (c) What percentage of the matches had **more than** 6 minutes of injury time?

[2 marks]

Answer _____ %

10 x is an integer.

$$-4 < x \leqslant 2$$

and

$$2 \leqslant x + 3 < 9$$

Work out all the possible values of x.

[3 marks]

Answer _____

8

Turn over ►

Do not write outside the box

11 Joe and Kyle share an amount of money in the ratio $7 : n$

Joe gets 35% of the money.

Work out the value of n.

[2 marks]

Answer _____

12 A biased coin is thrown 250 times.

The relative frequency of Heads is worked out after every 50 throws.

Total number of throws	50	100	150	200	250
Relative frequency	0.4	0.29	0.4	0.32	0.3

Circle the best estimate of the probability of Heads.

[1 mark]

0.3 0.32 0.342 0.4

Do not write outside the box

13 The amounts spent on clothes by 40 boys and 40 girls in one month were recorded.

The table shows information about the amounts spent by the boys.

Amount, x (£)	**Midpoint**	**Number of boys**	
$0 \leqslant x < 20$		22	
$20 \leqslant x < 40$		9	
$40 \leqslant x < 60$		6	
$60 \leqslant x < 80$		3	
		Total = 40	

The mean for the girls was £35

Estimate the mean for the girls as a percentage of the mean for the boys.

[5 marks]

Answer _____ %

8

Turn over ►

Do not write outside the box

14 Ali and Mel are making 3-digit codes.

The digit 0 is **not** used.

Ali only uses odd digits.

Mel only uses even digits.

14 (a) Ali can make x more codes than Mel.

Assume that digits **cannot** be repeated.

Work out the value of x.

[3 marks]

Answer _____

14 (b) In fact, digits **can** be repeated.

What does this tell you about the actual value of x?

Tick **one** box.

[1 mark]

☐ It is bigger than my answer to part (a)

☐ It is smaller than my answer to part (a)

☐ It is the same as my answer to part (a)

Do not write outside the box

15 Here is line L and the graph of $y = x - 1$

The scales of the axes are not shown.

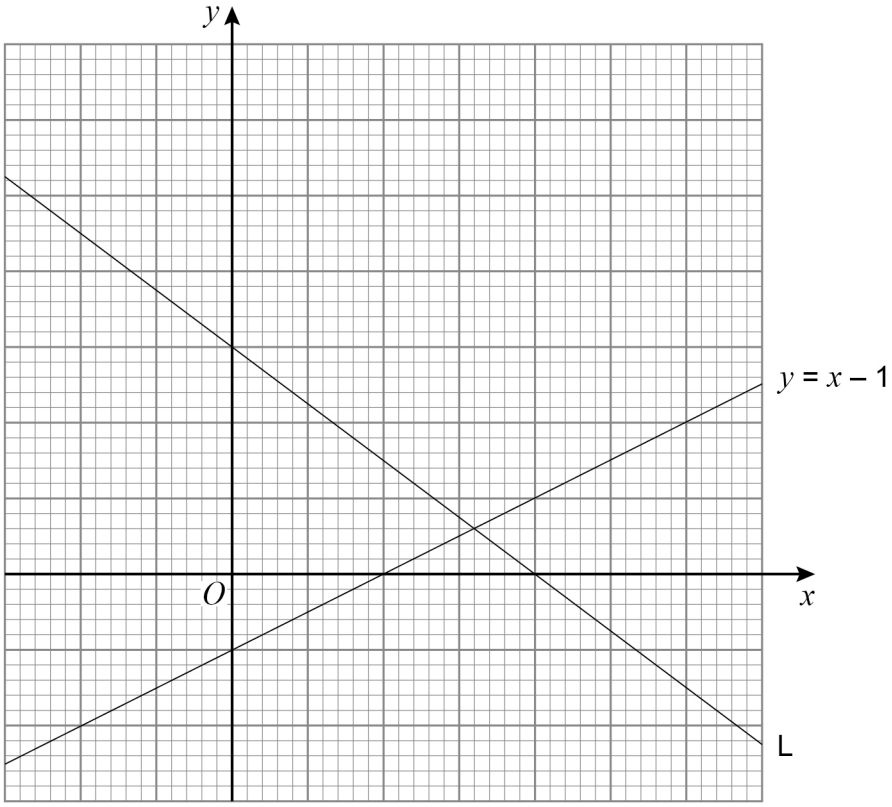

Work out the equation of line L.

[4 marks]

Answer _____

8

Turn over ►

Do not write outside the box

16 *ABC* and *ACD* are triangles.

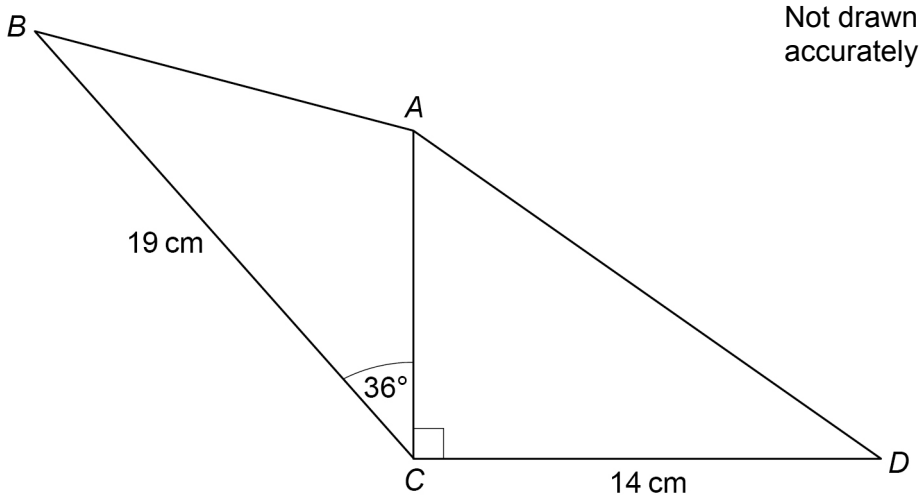

The area of *ACD* is 80.5 cm^2

Work out the area of *ABC*.

Give your answer to 3 significant figures.

[4 marks]

Answer _____ cm^2

Do not write outside the box

17 $m = \dfrac{p - 2b}{2}$

$p = 68.3$ correct to 1 decimal place.

$b = 8.7$ correct to 1 decimal place.

Work out the lower bound for m.

[3 marks]

Answer _____

Turn over for the next question

7

Do not write outside the box

18 In a bag there are blue discs, green discs and white discs.

There are four times as many blue discs as green discs.

number of blue discs : number of white discs = 3 : 5

One disc is selected at random.

Work out the probability that the disc is either blue or white.

[3 marks]

Answer _____

Do not write outside the box

19 Work out the area of the trapezium.

Not drawn accurately

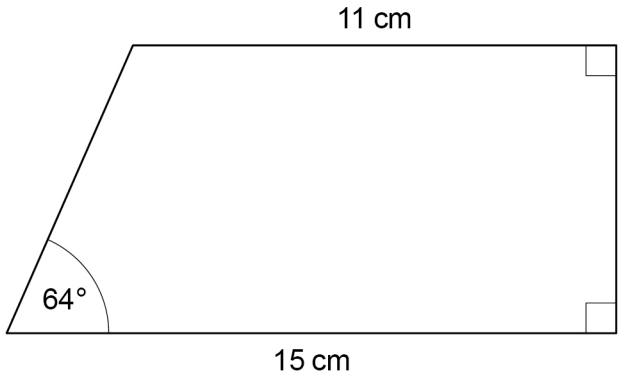

[4 marks]

Answer _____ cm^2

Turn over for the next question

7

Do not write outside the box

20 Expressions for consecutive triangular numbers are

$$\frac{n(n+1)}{2} \quad \text{and} \quad \frac{(n+1)(n+2)}{2}$$

Prove that the sum of two consecutive triangular numbers is always a square number.

[4 marks]

Do not write outside the box

21 A solid shape is made by joining two cones.

Each cone has the same radius.

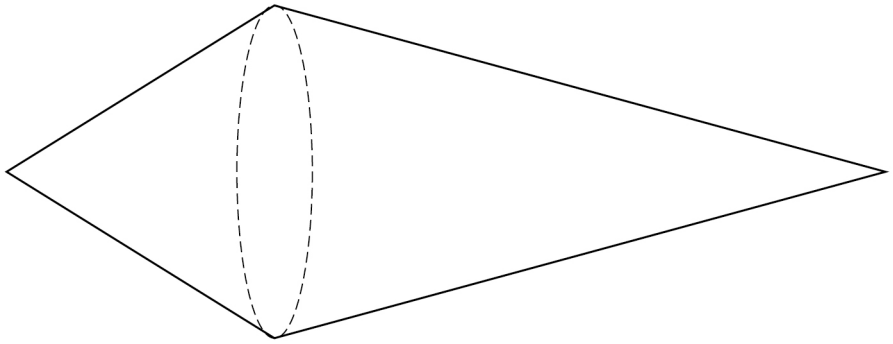

One cone has slant height = 2 × radius

The other cone has slant height = 3 × radius

The total surface area of the shape is 57.8π cm^2

Curved surface area of a cone = πrl where r is the radius and l is the slant height

Work out the radius.

[3 marks]

Answer _____ cm

7

Turn over ►

Do not write outside the box

22 Show that $(5\sqrt{3} - \sqrt{12})^2$ simplifies to an integer.

[3 marks]

23 A and B are similar cuboids.

surface area of A : surface area of B = 16 : 25

Work out volume of A : volume of B

Circle your answer.

[1 mark]

4 : 5 16 : 25 64 : 125 256 : 625

Do not write outside the box

24 Here is a sketch of the curve $y = x^2 + 4x - 12$

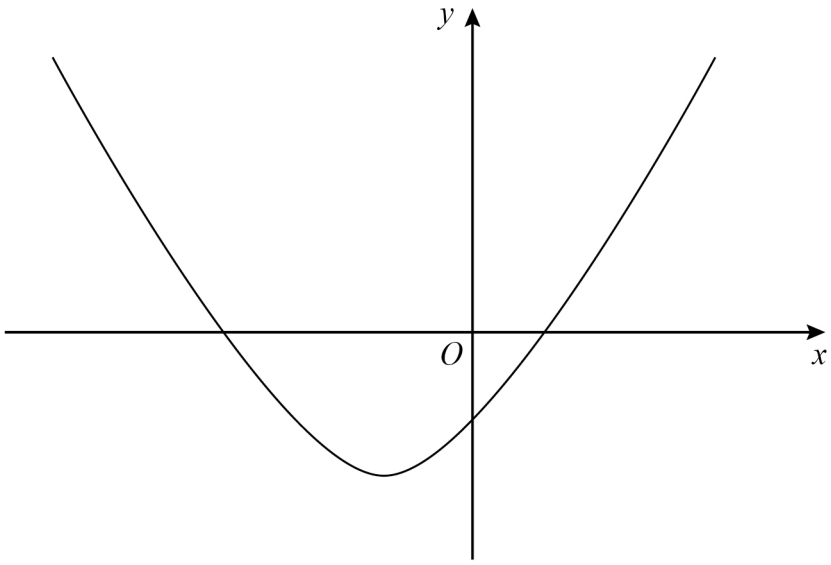

Work out the values of x for which $x^2 + 4x - 12 < 0$

Give your answer as an inequality.

[3 marks]

Answer _____

7

Turn over ►

Do not write outside the box

25 A sample of 50 eggs is taken from Farm A.

The table shows information about the masses of the eggs from Farm A.

Farm A

Mass, m (grams)	**Frequency**
$53 < m \leqslant 58$	8
$58 < m \leqslant 63$	19
$63 < m \leqslant 68$	15
$68 < m \leqslant 73$	8

A sample of 50 eggs is taken from Farm B.

The histogram shows information about the masses of the eggs from Farm B.

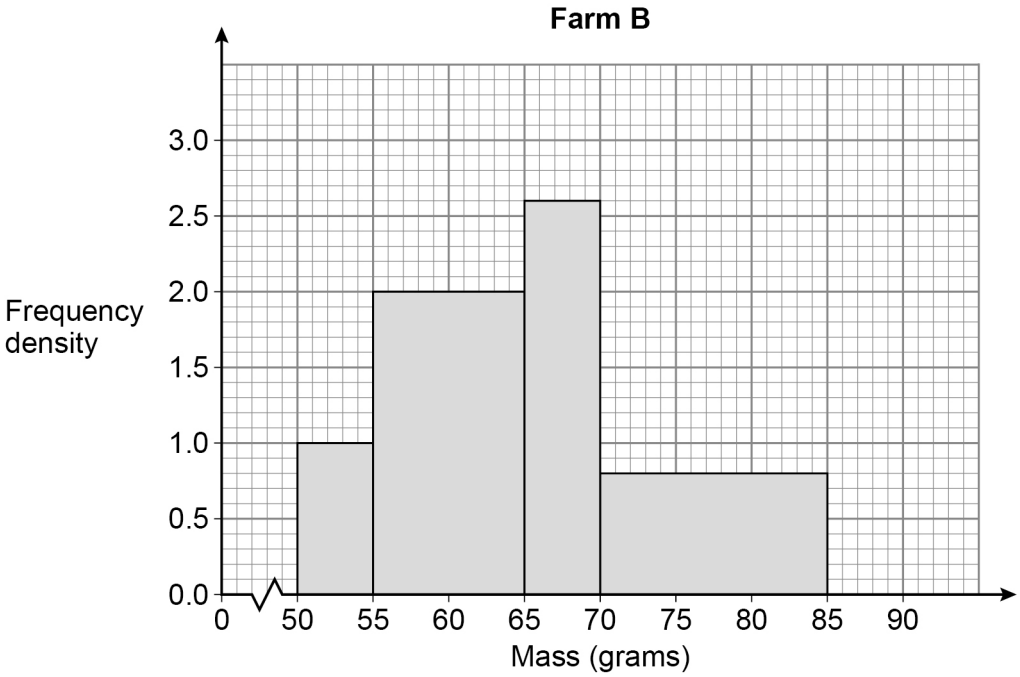

Do not write outside the box

For medium eggs, $53 \text{ g} < \text{mass} \leqslant 63 \text{ g}$

The Farm A sample has more medium eggs than the Farm B sample.

Using the table and the histogram, estimate how many more.

You **must** show your working.

[4 marks]

Answer _____

Turn over for the next question

4

Do not write outside the box

26 $(x + 5)(x + 2)(x + a) \equiv x^3 + bx^2 + cx - 30$

Work out the values of the integers a, b and c.

[3 marks]

a = _____

b = _____

c = _____

Do not write outside the box

27 $f(x) = \frac{2x}{5} - 1$

Work out the value of $f^{-1}(3) + f(-0.5)$

[5 marks]

Answer _____

END OF QUESTIONS

8

Do not write outside the box

There are no questions printed on this page

DO NOT WRITE ON THIS PAGE
ANSWER IN THE SPACES PROVIDED

Do not write outside the box

There are no questions printed on this page

DO NOT WRITE ON THIS PAGE
ANSWER IN THE SPACES PROVIDED

Do not write outside the box

There are no questions printed on this page

DO NOT WRITE ON THIS PAGE
ANSWER IN THE SPACES PROVIDED

Copyright information

For confidentiality purposes, from the November 2015 examination series, acknowledgements of third-party copyright material are published in a separate booklet rather than including them on the examination paper or support materials. This booklet is published after each examination series and is available for free download from www.aqa.org.uk after the live examination series.

Permission to reproduce all copyright material has been applied for. In some cases, efforts to contact copyright-holders may have been unsuccessful and AQA will be happy to rectify any omissions of acknowledgements. If you have any queries please contact the Copyright Team, AQA, Stag Hill House, Guildford, GU2 7XJ.

Copyright © 2019 AQA and its licensors. All rights reserved.