Please write clearly in block capitals.

Centre number | | | | | | Candidate number | | | | |

Surname _____

Forename(s) _____

Candidate signature _____

GCSE MATHEMATICS

H

Higher Tier Paper 1 Non-Calculator

Tuesday 21 May 2019 Morning Time allowed: 1 hour 30 minutes

Materials

For this paper you must have:
- mathematical instruments

You must **not** use a calculator.

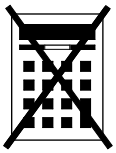

Instructions

- Use black ink or black ball-point pen. Draw diagrams in pencil.
- Fill in the boxes at the top of this page.
- Answer **all** questions.
- You must answer the questions in the spaces provided. Do not write outside the box around each page or on blank pages.
- Do all rough work in this book. Cross through any work you do not want to be marked.

Information

- The marks for questions are shown in brackets.
- The maximum mark for this paper is 80.
- You may ask for more answer paper, graph paper and tracing paper. These must be tagged securely to this answer book.

Advice

In all calculations, show clearly how you work out your answer.

For Examiner's Use	
Pages	Mark
2–3	
4–5	
6–7	
8–9	
10–11	
12–13	
14–15	
16–17	
18–19	
20–21	
22–23	
TOTAL	

Do not write outside the box

Answer **all** questions in the spaces provided

1 Here are two right-angled triangles.

Not drawn accurately

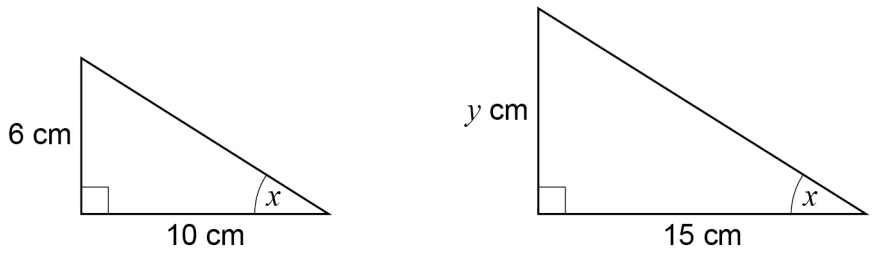

Circle the value of y.

[1 mark]

11 7.5 9 4

2 Work out the value of $\left(1\frac{2}{3}\right)^2$

Circle your answer.

[1 mark]

$1\frac{4}{9}$ $3\frac{1}{3}$ $2\frac{4}{9}$ $2\frac{7}{9}$

3 Work out the arc length, in metres, of a semicircle of radius 6 metres.

Circle your answer.

[1 mark]

3π 6π 12π 18π

Do not write outside the box

4 Circle the fraction that is equivalent to 4.625

[1 mark]

$\frac{39}{8}$ $\frac{37}{8}$ $\frac{185}{4}$ $\frac{17}{4}$

5 (a) Write 0.000 97 in standard form.

[1 mark]

Answer _____

5 (b) Work out $\frac{3 \times 10^5}{4 \times 10^3}$

Give your answer as an ordinary number.

[2 marks]

_____

_____

_____

_____

_____

_____

Answer _____

7

Turn over ►

Do not write outside the box

6 Anna plays a game with an ordinary, fair dice.

If she rolls 1 she wins.

If she rolls 2 or 3 she loses.

If she rolls 4, 5 or 6 she rolls again.

When she has to roll again,

if she rolls an odd number she wins

if she rolls an even number she loses.

6 (a) Complete the tree diagram with the four missing probabilities.

[2 marks]

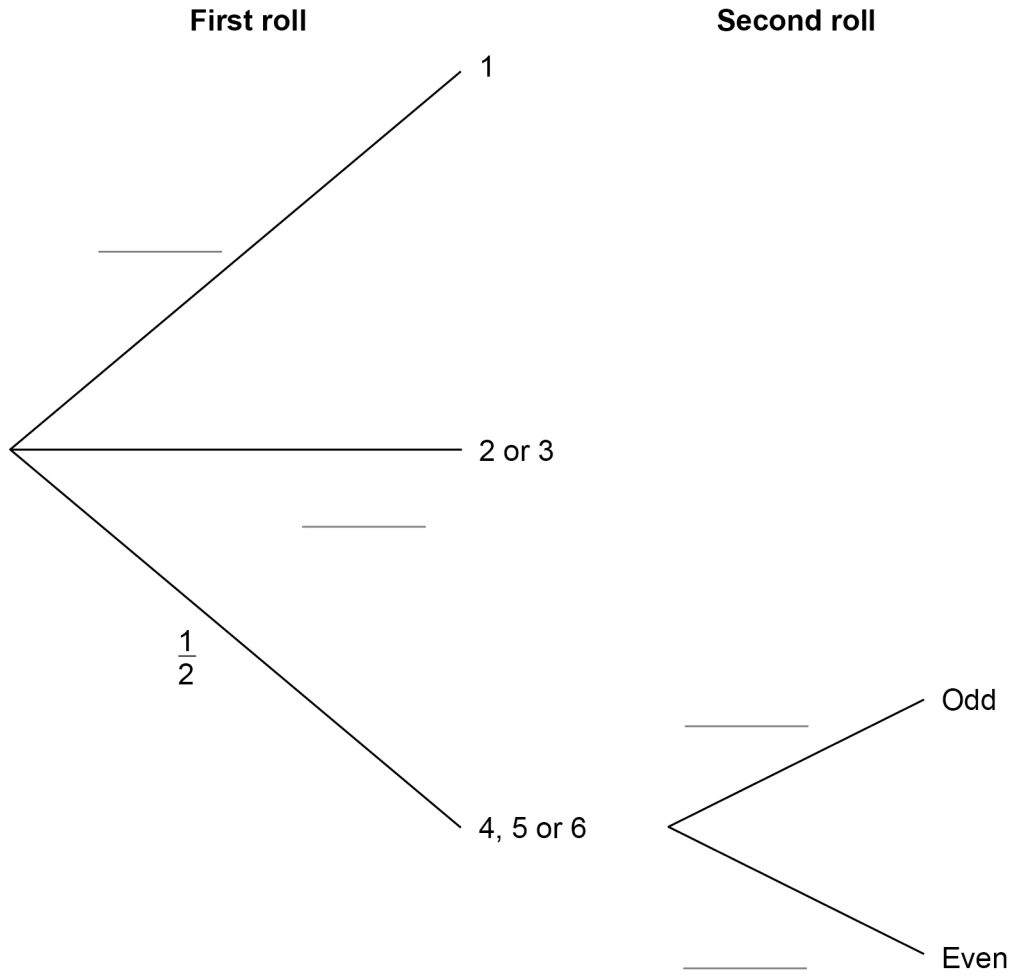

Do not write outside the box

6 (b) Is Anna more likely to win or to lose?

You **must** work out the probability that she wins.

[4 marks]

Turn over for the next question

6

Do not write outside the box

7 Three friends arrive at a party.

Their arrival increases the number of people at the party by 20%

In total, how many people are now at the party?

[2 marks]

Answer _____

8 Work out the value of $(3^{12} \div 3^{5}) \div (3^{2} \times 3)$

[3 marks]

Answer _____

Do not write outside the box

9 A shaded semicircle is inside a circle as shown.

Not drawn accurately

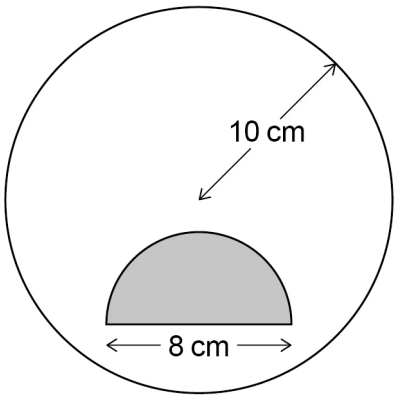

The **radius** of the circle is 10 cm

The **diameter** of the semicircle is 8 cm

How many times bigger is the unshaded area than the shaded area?

[4 marks]

Answer _____

Turn over for the next question

9

Do not write outside the box

10 The number of items, n, made in 1 hour by a machine is given by $n = \frac{60}{t}$

t is the time in minutes the machine takes to make one item.

The value of t changes for different types of item.

10 (a) On the grid below, draw the graph of $n = \frac{60}{t}$ for values of t from 1 to 4

[2 marks]

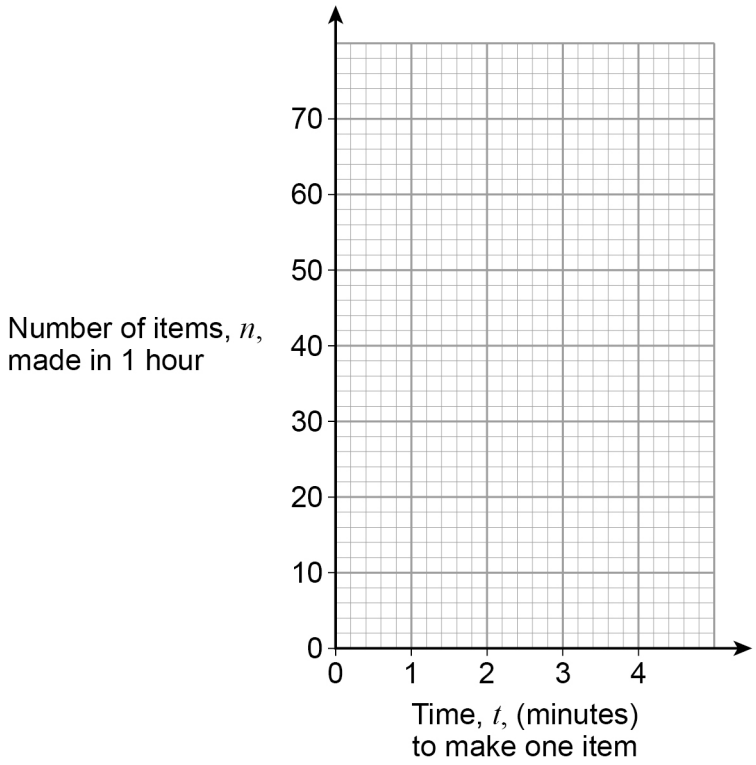

10 (b) The machine takes 3 minutes 30 seconds to make one item.

Use your graph to estimate the value of n.

[2 marks]

Answer _____

Do not write outside the box

11 Ed and Fay shared £330 in the ratio 7 : 4

Ed gives Fay some of his money.

Fay now has the same amount as Ed.

How much does Ed give Fay?

[3 marks]

Answer £ _____

12 The next term of a sequence is made by adding the previous two terms.

Which of these sequences follows this rule?

Circle your answer.

[1 mark]

–9 2 –7 –5 –12

–3 5 –2 3 1

0 –3 –3 0 –3

–1 –1 –2 –3 1

8

Turn over ►

Do not write outside the box

13 The triangular cross section of a prism is an isosceles right-angled triangle.

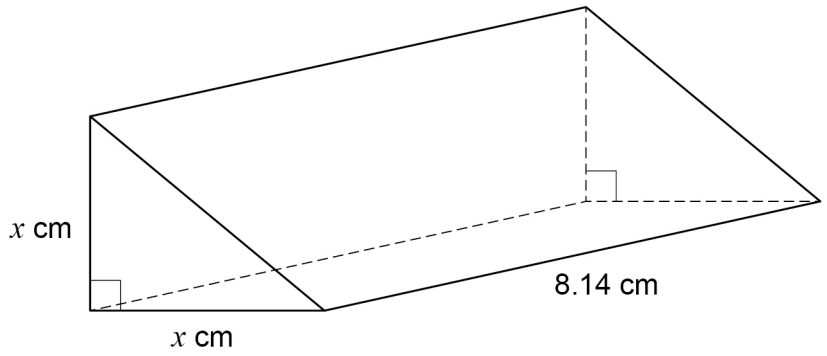

The volume of the prism is 102 cm^3

Use approximations to estimate the value of x.

You **must** show your working.

[3 marks]

Answer _____

Do not write outside the box

14 Here is a quadrilateral.

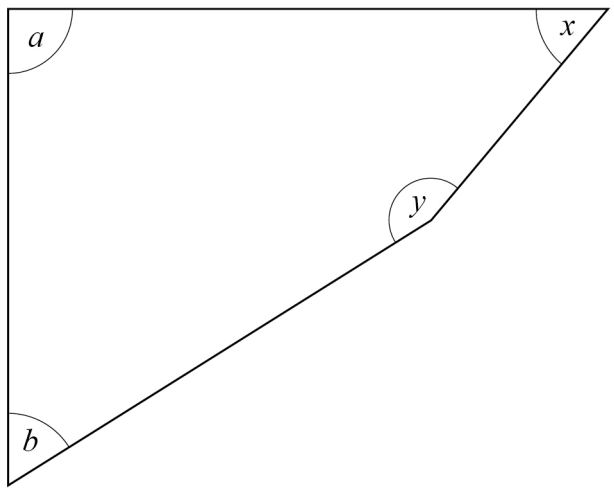

Not drawn accurately

$a = 90°$ and $a : b = 5 : 3$

$x : y = 1 : 3$

Show that $b = x$

[3 marks]

6

Turn over ►

Do not write outside the box

15 Here is some information about the test marks of 120 students.

Mark, *m*	$0 < m \leqslant 10$	$10 < m \leqslant 20$	$20 < m \leqslant 30$	$30 < m \leqslant 40$	$40 < m \leqslant 50$
Frequency	20	28	40	20	12

15 (a) Complete the cumulative frequency table.

[1 mark]

Mark, *m*	$m \leqslant 10$	$m \leqslant 20$	$m \leqslant 30$	$m \leqslant 40$	$m \leqslant 50$
Cumulative frequency	20	48			

15 (b) Draw a cumulative frequency graph.

[2 marks]

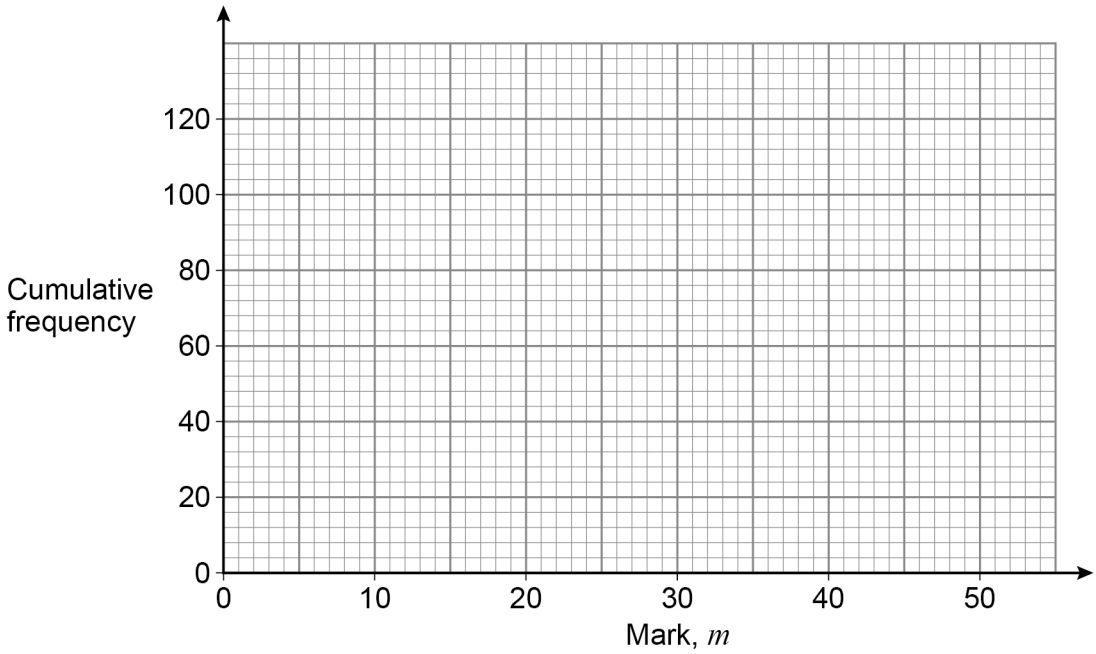

Do not write outside the box

15 (c) Students who scored 15 marks or fewer take another test.

Use your graph to estimate how many students take another test.

[2 marks]

Answer _____

16 Simplify fully $\dfrac{4x - 8x^2}{12x - 6}$

[3 marks]

Answer _____

Turn over for the next question

8

Do not write outside the box

17 Toby is forming and solving equations.

17 (a)

The product of half of a number and three more than the number
is the same as
the square of the number

Toby uses y to represent the number.

Write an equation that Toby could form.

[2 marks]

Answer _____

17 (b) Toby forms another equation.

$$x = \frac{9}{8x}$$

He wants to work out the values of x.

Here is his working.

$$x = \frac{9}{8x}$$

$$8x^2 = 9$$

$$8x = 3 \text{ or } 8x = -3$$

$$x = \frac{3}{8} \text{ or } x = -\frac{3}{8}$$

What error has he made in his working?

[1 mark]

Do not write outside the box

18 Here is an identity.

$$x^2 - y^2 \equiv (x + y)(x - y)$$

18 (a) Use the identity to work out the value of $193^2 - 7^2$

You **must** show your working.

[2 marks]

Answer _____

18 (b) Factorise $100a^2 - 81b^2$

[1 mark]

Answer _____

19 Circle the fraction that is equivalent to $0.\dot{1}$

[1 mark]

$\frac{1}{9}$ $\frac{1}{99}$ $\frac{1}{10}$ $\frac{11}{100}$

7

Do not write outside the box

20 *A*, *B* and *C* are points on a circle.

CD is a tangent.

Not drawn accurately

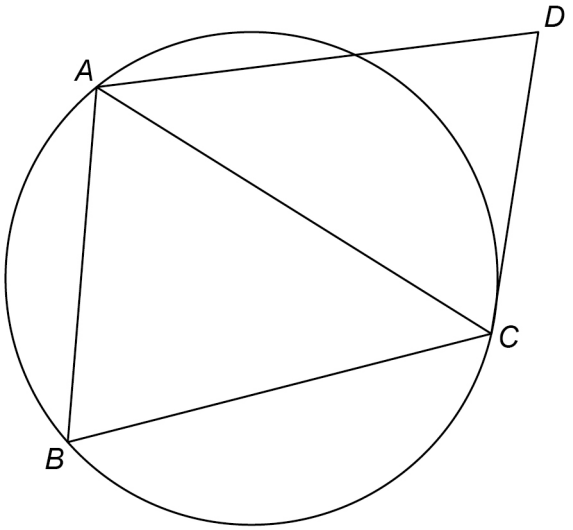

20 (a) Assume that triangle *ABC* is isosceles with $AC = BC$

Prove that *AB* is parallel to *DC*.

[4 marks]

Do not write outside the box

20 (b) In fact, triangle *ABC* is equilateral.

Tick the **two** boxes for the statements that **must** be correct.

[1 mark]

☐ *AB* is parallel to *DC*

☐ *AC* bisects angle *BCD*

☐ *AC* bisects angle *BAD*

21 Solve the simultaneous equations

$$2x + 3y = 5p$$
$$y = 2x + p$$

where p is a constant.

Give your answers in terms of p in their simplest form.

[4 marks]

$x =$ _____ $y =$ _____

9

Do not write outside the box

22 *ABC* and *ACD* are triangles.

k is a constant.

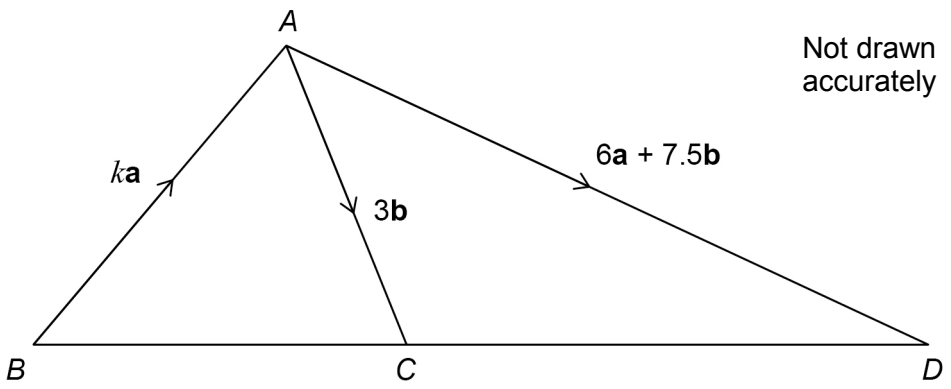

22 (a) Show that $\overrightarrow{CD}$ = 6**a** + 4.5**b**

[1 mark]

22 (b) *BCD* is a straight line.

Work out the value of k.

You **must** show your working.

[3 marks]

Answer _____

Do not write outside the box

23 Simplify $8^4 \div 32^{\frac{2}{5}}$

Give your answer in the form 2^m where m is an integer.

[3 marks]

Answer _____

24 $f(x) = \sin(x - 90°)$

Circle the value of $f(0°)$

[1 mark]

1 0 $-\frac{1}{2}$ –1

Turn over for the next question

8

Do not write outside the box

25 P (4, 8) is a point on a circle, centre O.

The tangent at P intersects the axes at points A and B.

Not drawn accurately

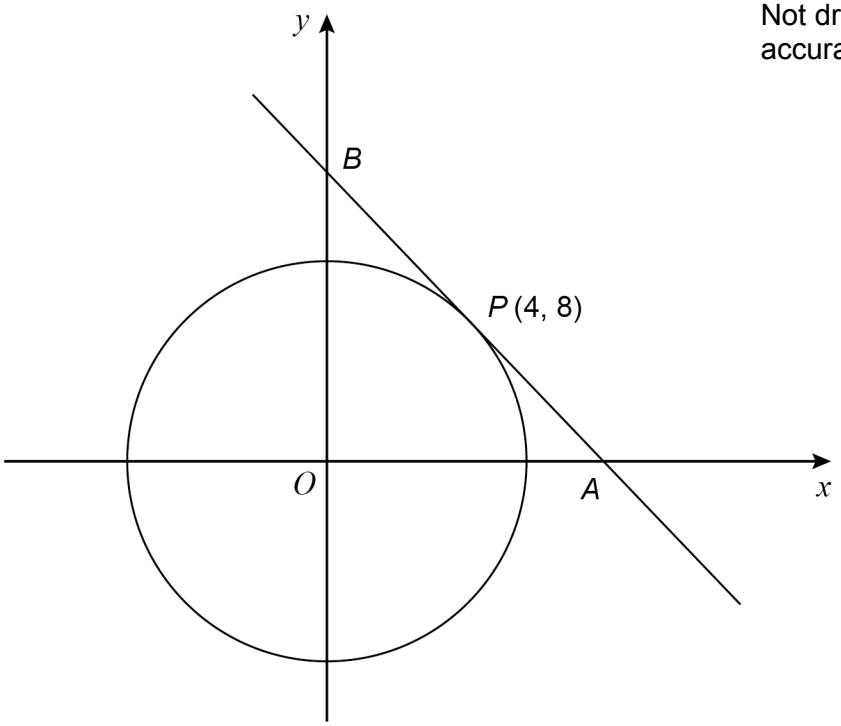

25 (a) Show that the gradient of the tangent is $-\frac{1}{2}$

[2 marks]

Do not write outside the box

25 (b) Work out the length *AB*.

Give your answer in the form $a\sqrt{5}$ where a is an integer.

You **must** show your working.

[4 marks]

Answer _____ units

Turn over for the next question

6

Do not write outside the box

26 The turning point of the graph $y = (x + a)^2 + b$ has x-coordinate -2

(3, 1) is another point on the graph.

Work out the y-coordinate of the turning point.

[3 marks]

Answer _____

Do not write outside the box

27 Angle x is acute.

$$\cos x = \sin 60° \times \tan 30°$$

Work out the size of angle x.

You **must** show your working.

[3 marks]

Answer _____ degrees

END OF QUESTIONS

6

Do not write outside the box

There are no questions printed on this page

DO NOT WRITE ON THIS PAGE
ANSWER IN THE SPACES PROVIDED

Copyright information

For confidentiality purposes, from the November 2015 examination series, acknowledgements of third-party copyright material are published in a separate booklet rather than including them on the examination paper or support materials. This booklet is published after each examination series and is available for free download from www.aqa.org.uk after the live examination series.

Permission to reproduce all copyright material has been applied for. In some cases, efforts to contact copyright-holders may have been unsuccessful and AQA will be happy to rectify any omissions of acknowledgements. If you have any queries please contact the Copyright Team, AQA, Stag Hill House, Guildford, GU2 7XJ.

Copyright © 2019 AQA and its licensors. All rights reserved.