Please write clearly in block capitals.

Centre number | | | | | |  Candidate number | | | | |

Surname _____

Forename(s) _____

Candidate signature _____

# GCSE MATHEMATICS

**H**

Higher Tier  Paper 3 Calculator

Tuesday 12 June 2018  Morning  Time allowed: 1 hour 30 minutes

## Materials

**For this paper you must have:**
- a calculator
- mathematical instruments.

## Instructions
- Use black ink or black ball-point pen. Draw diagrams in pencil.
- Fill in the boxes at the top of this page.
- Answer **all** questions.
- You must answer the questions in the spaces provided. Do not write outside the box around each page or on blank pages.
- Do all rough work in this book. Cross through any work you do not want to be marked.

## Information
- The marks for questions are shown in brackets.
- The maximum mark for this paper is 80.
- You may ask for more answer paper, graph paper and tracing paper. These must be tagged securely to this answer book.

## Advice
- In all calculations, show clearly how you work out your answer.

| For Examiner's Use | |
|---|---|
| Pages | Mark |
| 2–3 | |
| 4–5 | |
| 6–7 | |
| 8–9 | |
| 10–11 | |
| 12–13 | |
| 14–15 | |
| 16–17 | |
| 18–19 | |
| 20–21 | |
| 22–23 | |
| 24–25 | |
| **TOTAL** | |

Do not write outside the box

Answer **all** questions in the spaces provided

**1** Circle the decimal that is closest in value to $\frac{11}{20}$

**[1 mark]**

0.56 0.6 0.525 0.5

**2** Circle the list of **all** the integers that satisfy $-2 < x \leqslant 4$

**[1 mark]**

–2, –1, 0, 1, 2, 3 –1, 0, 1, 2, 3

–2, –1, 0, 1, 2, 3, 4 –1, 0, 1, 2, 3, 4

**3** Circle the largest number.

**[1 mark]**

$3.2\dot{7}$ 3.27 3.277 $3.20\dot{7}$

Do not write outside the box

**4** What is the size of an exterior angle of a regular decagon?

Circle your answer.

**[1 mark]**

18° 36° 144° 162°

**5** $a$ is a common factor of 72 and 120

$b$ is a common multiple of 6 and 9

Work out the highest possible value of $\frac{a}{b}$

**[4 marks]**

Answer _____

**Turn over for the next question**

8

Do not write outside the box

**6** A and B are similar shapes.

B is an enlargement of A with scale factor 1.5

Not drawn accurately

**A** **B**

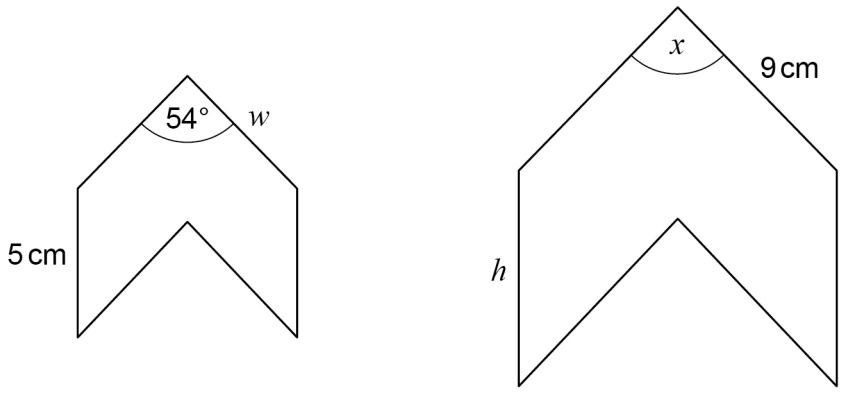


Work out the values of $x$, $h$ and $w$.

**[3 marks]**

$x$ = _____ degrees

$h$ = _____ cm

$w$ = _____ cm

Do not write outside the box

**7** Investment A Save £150 per month for 2 years.
2.5% interest is added to the total amount saved.

Investment B Invest £3500
Compound interest is added at 3% per year.

After 2 years, how much **more** is investment B worth than investment A?

**[4 marks]**

Answer £_____

**Turn over for the next question**

7

Do not write outside the box

**8 (a)** Show that the lines $y = 3x + 7$ and $2y - 6x = 8$ are parallel.

Do **not** use a graphical method.

**[3 marks]**

**8 (b)** Is the point (–5, –6) above, below or on the line $y = 3x + 7$ ?

Tick **one** box.

☐ Above ☐ Below ☐ On the line

You **must** show your working.

Do **not** use a graphical method.

**[2 marks]**

Do not write outside the box

**9** The cost of a ticket increases by 10% to £19.25

Work out the original cost.

**[3 marks]**

Answer £ _____

**10** The $n$th term of a sequence is $12n - 5$

Work out the numbers in the sequence that

have two digits

and

are **not** prime.

**[3 marks]**

Answer _____

11

**Turn over ►**

Do not write outside the box

**11** $\mathbf{a} = \begin{pmatrix} 6 \\ -10 \end{pmatrix}$ $\mathbf{b} = \begin{pmatrix} -1 \\ 2 \end{pmatrix}$ $\mathbf{c} = \begin{pmatrix} -4 \\ 7 \end{pmatrix}$

**11 (a)** Work out $\mathbf{a} + \mathbf{b} + \mathbf{c}$

**[2 marks]**

Answer $\begin{pmatrix} \quad \\ \quad \end{pmatrix}$

**11 (b)** Show that $\mathbf{a} + 2\mathbf{c}$ is parallel to $\mathbf{b}$

**[2 marks]**

Do not write outside the box

**12**

$$\text{pressure} = \frac{\text{force}}{\text{area}}$$

A force of 40 Newtons is applied to an area of 3.2 square metres.

Work out the pressure.

Give the units of your answer.

**[2 marks]**

Answer _____

**13** Tick **all** the statements that are true for any rhombus.

**[1 mark]**

☐ The diagonals are lines of symmetry

☐ The diagonals bisect each other

☐ The diagonals are perpendicular

☐ The diagonals are equal in length

**Turn over for the next question**

7

Do not write outside the box

**14** Draw the graph of $y = 0.8^x$ for values of $x$ from 0 to 6

**[3 marks]**

| $x$ | 0 | 1 | 2 | 3 | 4 | 5 | 6 |
|---|---|---|---|---|---|---|---|
| $y$ | | | | | | | |

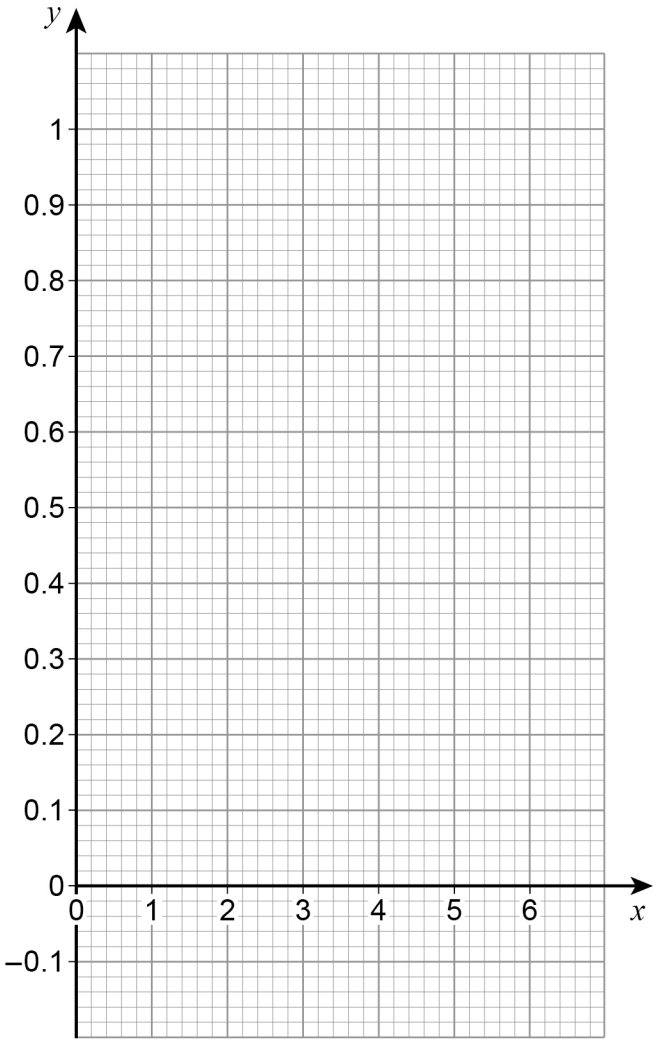

Do not write outside the box

**15** Amy has $x$ beads.

Billy has three more beads than Amy.

Carly has four times as many beads as Billy.

Circle the expression for the number of beads that Carly has.

**[1 mark]**

$4x + 3$ $3x + 4$ $4(x + 3)$ $x + 12$

**16** Two straight lines intersect at point $A$.

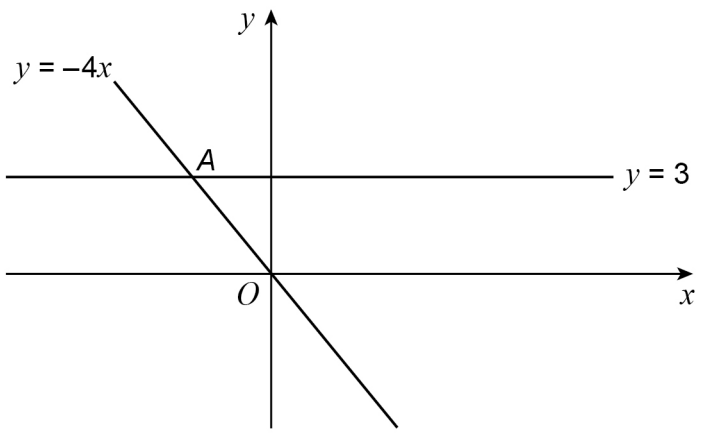


Not drawn accurately

Circle the coordinates of $A$.

**[1 mark]**

$(-\frac{3}{4}, 3)$ $(-4, 3)$ $(-12, 3)$ $(-\frac{4}{3}, 3)$

5

**Turn over ►**

Do not write outside the box

**17** Here are two methods to make a 4-digit code.

Codes can have repeated digits.

**Method A**

For the first two digits use an odd number between 30 and 100

For the last two digits use a multiple of 11

**Method B**

Use four digits in the order even odd even odd

Do **not** use the digit zero

Which method gives the **greater** number of possible codes?

You **must** show your working.

**[3 marks]**

Answer _____

Do not write outside the box

**18** Show that, for $x \neq 0$

$$\frac{x+4}{3x} - \frac{5}{2x}$$

can be written in the form $\frac{ax+b}{cx}$ where $a$, $b$ and $c$ are integers.

**[3 marks]**

Answer _____

**19** The equation of a straight line is $3x + 2y = 24$

Circle the point where the line crosses the $x$-axis.

**[1 mark]**

(0, 8) (12, 0) (0, 12) (8, 0)

7

**Turn over ►**

Do not write outside the box

**20** All dimensions are in centimetres.

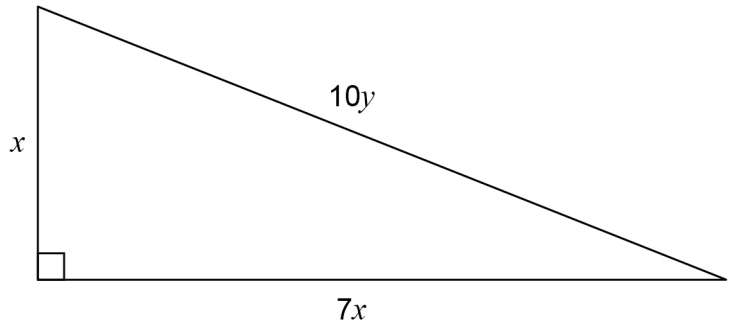


Not drawn accurately

Use Pythagoras' theorem to work out the exact value of $\frac{x}{y}$

**[3 marks]**

Answer _____

Do not write outside the box

**21** The mass of an ornament is $m$ grams.

The height of the ornament is $h$ centimetres.

$m$ is directly proportional to the cube of $h$.

$m = 1600$ when $h = 8$

**21 (a)** Work out an equation connecting $m$ and $h$.

**[3 marks]**

Answer _____

**21 (b)** Work out the mass of an ornament of height 12 centimetres.

**[2 marks]**

Answer _____ grams

**Turn over for the next question**

8

Do not write outside the box

**22** *A*, *B* and *C* are points on a circle.

*DCB* is a straight line.

*PAQ* is a tangent to the circle.

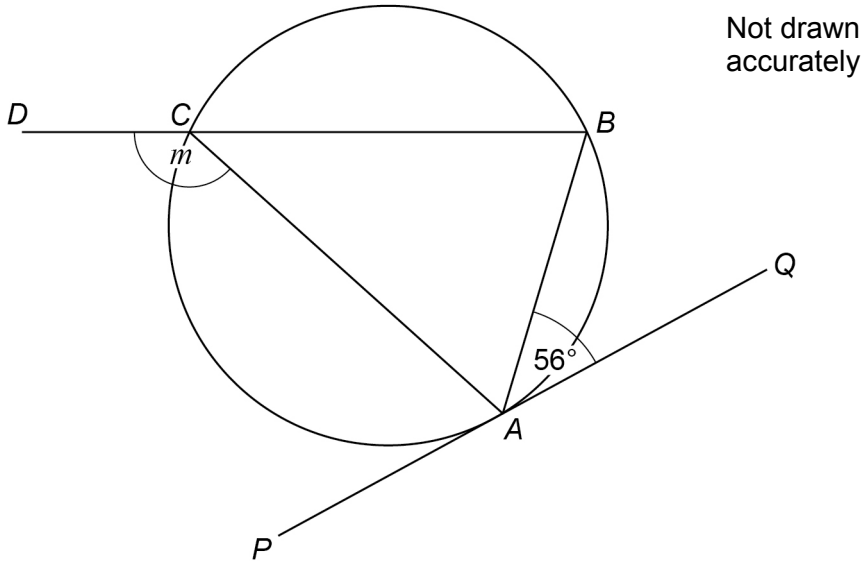


Sam is trying to work out the size of angle $m$.

Here is his working.

| | |
|---|---|
| angle *ACB* = 56° | angles in the same segment are equal |
| $m$ = 180° – 56° | angles at a point on a straight line add up to 180° |
| $m$ = 124° | |

Make a criticism of his working.

**[1 mark]**

Do not write outside the box

**23** A sequence of numbers is formed by the iterative process

$$u_{n+1} = \frac{3}{u_n + 1}, \qquad u_1 = 4$$

Work out the values of $u_2$ and $u_3$

**[2 marks]**

$u_2 =$ _____

$u_3 =$ _____

**Turn over for the next question**

3

Do not write outside the box

**24** The speed-time graph shows 20 seconds of a car journey.

Harry wants to estimate the distance the car travels in this time.

He uses a triangle and a trapezium, as shown, to estimate the area under the graph.

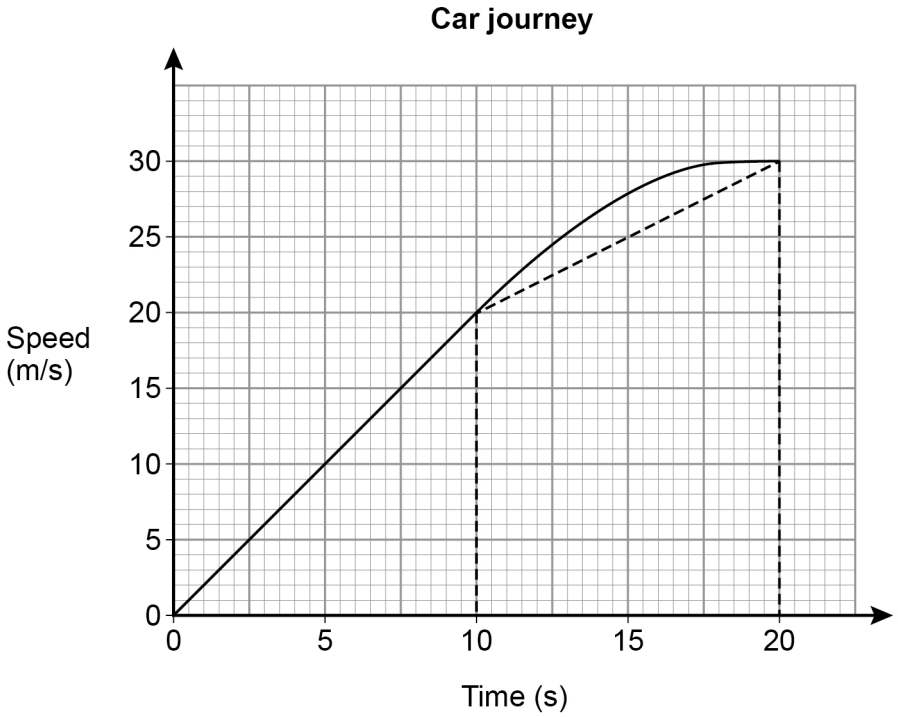


**24 (a)** Complete Harry's method to estimate the distance the car travels.

**[3 marks]**

Answer _____ m

Do not write outside the box

**24 (b)** For this journey, which of these is true for Harry's method?

Tick **one** box.

**[1 mark]**

☐ It works out an overestimate of the distance

☐ It works out an underestimate of the distance

☐ It could work out an overestimate or an underestimate of the distance

**Turn over for the next question**

4

Do not write outside the box

**25** *ABCDEF* is a triangular prism which represents part of a hill.

*ABCF* is the horizontal rectangular base.

*D* is vertically above *C*.

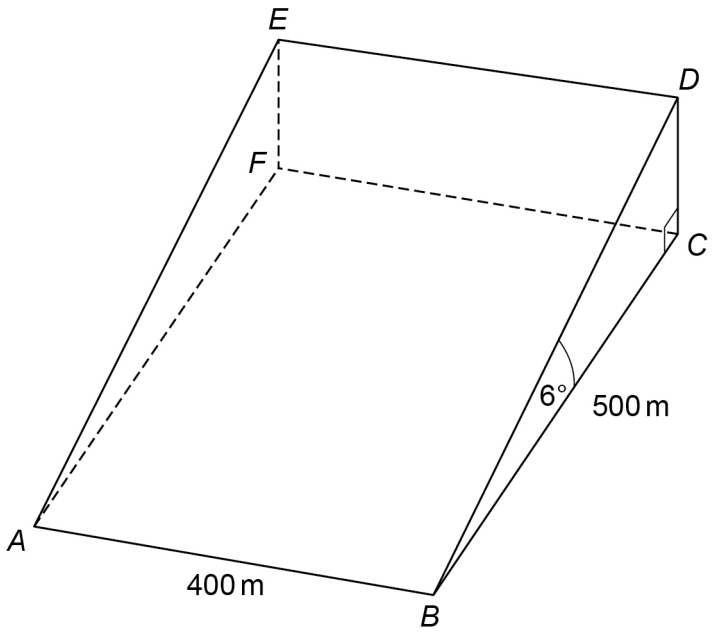


**25 (a)** Work out the height *CD*.

**[2 marks]**

Answer _____ m

Do not write outside the box

**25 (b)** Jamil walks in a straight line from *A* to *D*.

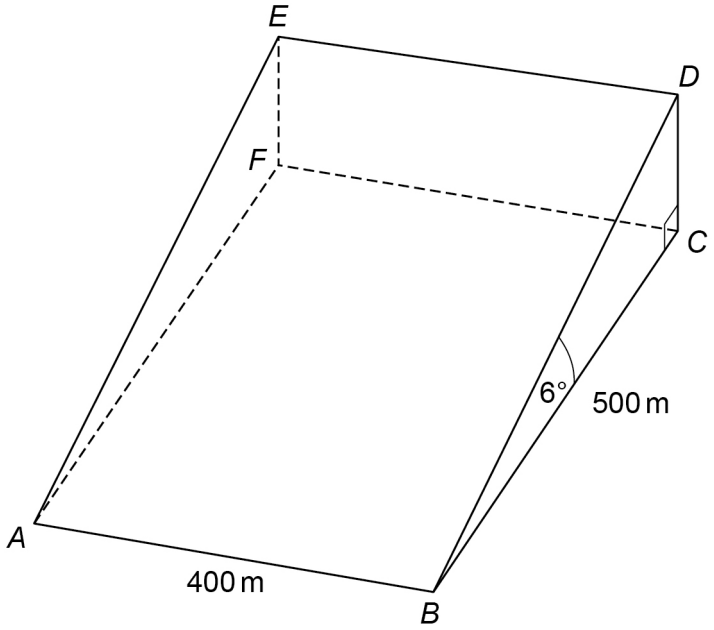


Work out the size of angle *DAC*.

You **must** show your working.

**[4 marks]**

Answer _____ degrees

6

**Turn over ►**

Do not write outside the box

**26** The histogram shows information about the speed of cars as they pass a checkpoint.

The scale on the frequency density axis is missing.

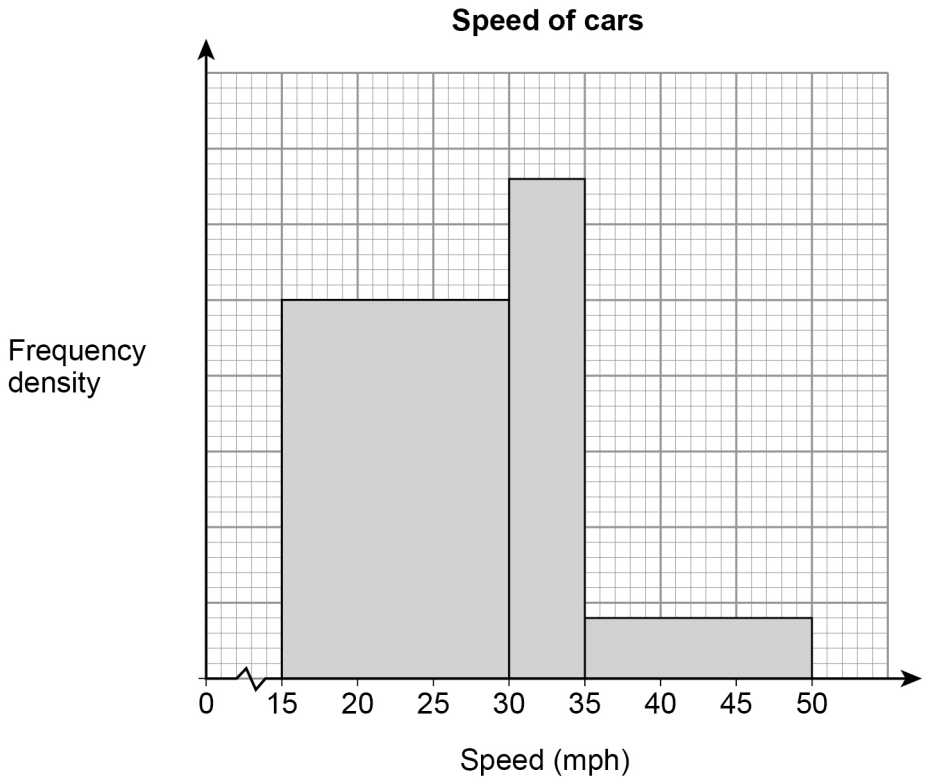


The histogram shows information about 480 cars.

**26 (a)** How many cars does the first bar represent?

**[4 marks]**

Answer _____

Do not write outside the box

**26 (b)** Cars with a speed greater than 40 mph are over the speed limit.

Use the histogram to estimate the number of cars that are over the speed limit.

**[2 marks]**

Answer _____

**Turn over for the next question**

6

Do not write outside the box

**27** A bag contains 30 discs.

10 are red and 20 are blue.

One disc is taken out at random and replaced by **two** of the other colour.

Another disc is then taken out at random and replaced by **two** of the other colour.

Another disc is then taken out at random.

Work out the probability that all three discs taken out are **red**.

**[3 marks]**

Answer _____

Do not write outside the box

**28** *P* is a point on the circle with equation $x^2 + y^2 = 80$

*P* has $x$-coordinate 4 and is below the $x$-axis.

Not drawn accurately

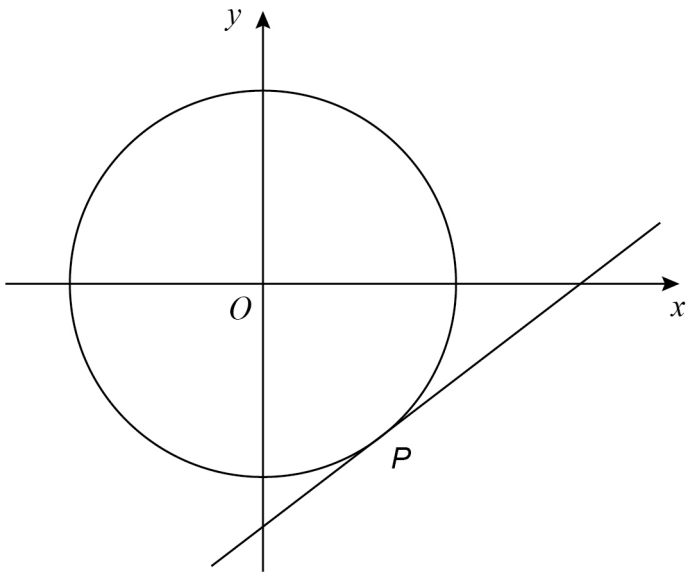


Work out the equation of the tangent to the circle at *P*.

**[5 marks]**

Answer _____

**END OF QUESTIONS**

8

Do not write outside the box

**There are no questions printed on this page**

**DO NOT WRITE ON THIS PAGE**
**ANSWER IN THE SPACES PROVIDED**

Do not write outside the box

**There are no questions printed on this page**

**DO NOT WRITE ON THIS PAGE**
**ANSWER IN THE SPACES PROVIDED**

Do not write outside the box

**There are no questions printed on this page**

**DO NOT WRITE ON THIS PAGE**
**ANSWER IN THE SPACES PROVIDED**

**Copyright information**

For confidentiality purposes, from the November 2015 examination series, acknowledgements of third party copyright material will be published in a separate booklet rather than including them on the examination paper or support materials. This booklet is published after each examination series and is available for free download from www.aqa.org.uk after the live examination series.

Permission to reproduce all copyright material has been applied for. In some cases, efforts to contact copyright-holders may have been unsuccessful and AQA will be happy to rectify any omissions of acknowledgements. If you have any queries please contact the Copyright Team, AQA, Stag Hill House, Guildford, GU2 7XJ.

Copyright © 2018 AQA and its licensors. All rights reserved.