AQA

Please write clearly in block capitals.

Centre number | | | | | | Candidate number | | | | |

Surname StemUp Model Solution

Forename(s)

Candidate signature

GCSE MATHEMATICS

F

Foundation Tier Paper 3 Calculator

Wednesday 8 November 2017 Morning Time allowed: 1 hour 30 minutes

Materials

For this paper you must have:
- a calculator
- mathematical instruments.

Instructions
- Use black ink or black ball-point pen. Draw diagrams in pencil.
- Answer **all** questions.
- You must answer the questions in the spaces provided. Do not write outside the box around each page or on blank pages.
- Do all rough work in this book. Cross through any work you do not want to be marked.

Information
- The marks for questions are shown in brackets.
- The maximum mark for this paper is 80.
- You may ask for more answer paper, graph paper and tracing paper. These must be tagged securely to this answer book.

Advice
- In all calculations, show clearly how you work out your answer.

For Examiner's Use	
Pages	Mark
2–3	
4–5	
6–7	
8–9	
10–11	
12–13	
14–15	
16–17	
18–19	
20–21	
22–23	
24–25	
TOTAL	

Do not write outside the box

Answer **all** questions in the spaces provided

1 Circle the cube number.

[1 mark]

100 1000 10 000 100 000

2 A fair ordinary dice is thrown once.

Circle the probability of getting a 2 or a 3

[1 mark]

$\frac{1}{6}$ $\frac{2}{6}$ $\frac{3}{6}$ $\frac{5}{6}$

3 Circle the decimal that is greater than $\frac{1}{5}$ and less than $\frac{1}{4}$

[1 mark]

0.152 0.200 0.215 0.251

Do not write outside the box

4 What is a **litre** a unit of?

Circle your answer.

[1 mark]

area density mass capacity

5 2.5 kg of carrots cost £1.70

Work out the cost of 3.25 kg of carrots.

[3 marks]

1.70 ÷ 2.5 = 0.68 (£ per kg)

0.68 × 3.25 = 2.21

Answer £ 2.21

Turn over for the next question

7

Do not write outside the box

6 Gina makes a sandwich using

bread (B) or a roll (R)

and

ham (H) or cheese (C)

and

salad (S) or pickle (P)

6 (a) List **all** the possible types of sandwich Gina could make.
One has been done for you.

[2 marks]

B H S

R H S

B H P

R H P

B C S

R C S

B C P

R C P

6 (b) What **fraction** of the possible types of sandwich have cheese **and** pickle?

[1 mark]

Answer $\frac{2}{8}$

Do not write outside the box

7 *ABC* is a right-angled triangle.

A is the point (–3, –2)

B is the point (1, –2)

C is a point on the line $y = 4$

7 (a) Draw triangle *ABC* on the centimetre grid below.

[3 marks]

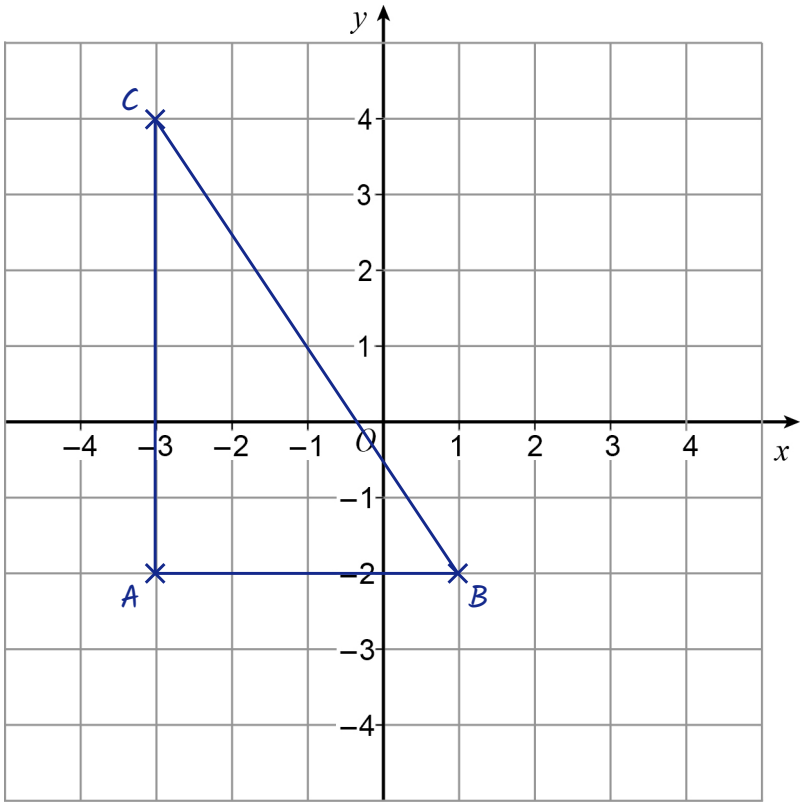

7 (b) Work out the area of triangle *ABC*.

[2 marks]

Base AB = 4, height AC = 6

Area = ½ × 4 × 6 = 12

Answer 12 cm^2

8

Turn over ►

Do not write outside the box

8 (a) Complete the number machine so that $q = 7r - 2$

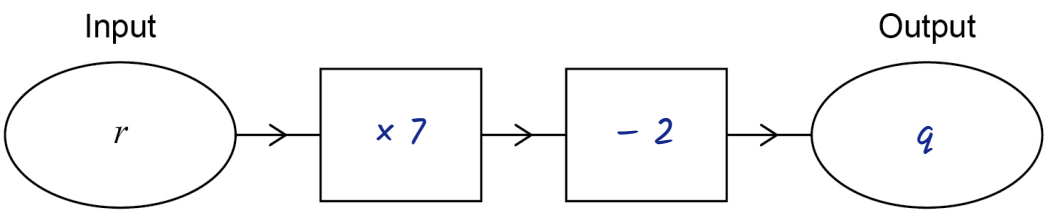

[2 marks]

8 (b) Write down the output y in terms of x.

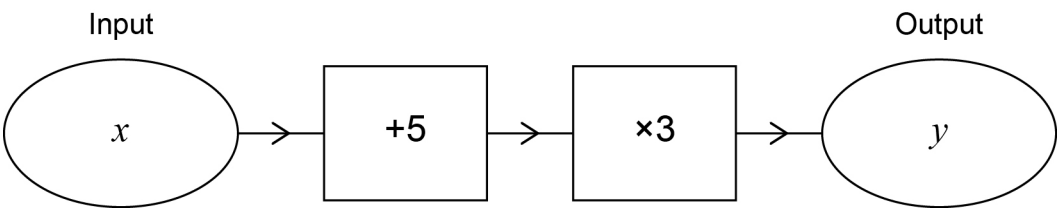

[1 mark]

Answer $3(x + 5)$

Do not write outside the box

9 A farmer has 580 eggs to put into boxes.

The boxes come in three sizes.

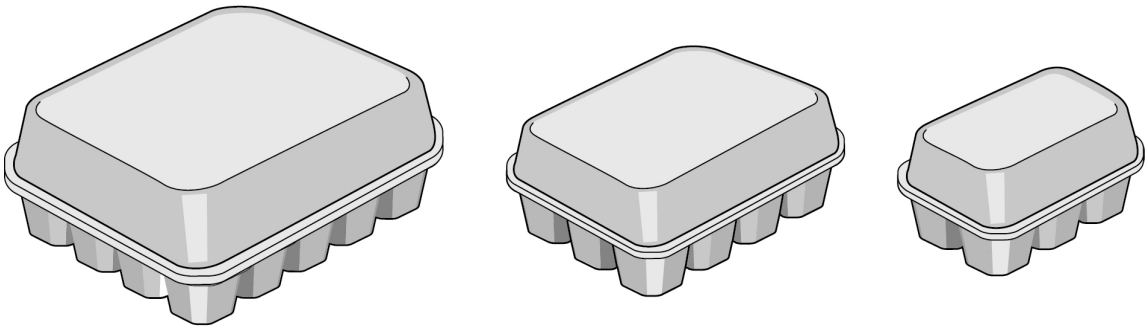

20 eggs 12 eggs 6 eggs

He wants

at least 10 boxes of 20 eggs

at least 15 boxes of 12 eggs

at least 25 boxes of 6 eggs.

The farmer fills 54 boxes with the 580 eggs.

Show how he does this.

[5 marks]

Minimum: 10 × 20 = 200, 15 × 12 = 180, 25 × 6 = 150

200 + 180 + 150 = 530 eggs in 10 + 15 + 25 = 50 boxes

580 − 530 = 50 eggs left 54 − 50 = 4 boxes left

4 boxes holding 50 eggs: 20 + 12 + 12 + 6 = 50

so 1 more box of 20, 2 more boxes of 12, 1 more box of 6

Boxes: 10 + 1 = 11, 15 + 2 = 17, 25 + 1 = 26

Check: 11 × 20 + 17 × 12 + 26 × 6 = 220 + 204 + 156 = 580

11 + 17 + 26 = 54 boxes

Answer 11 boxes of 20 eggs

17 boxes of 12 eggs

26 boxes of 6 eggs

8

Turn over ►

Do not write outside the box

10 Megan says,

"If you add any three multiples of 10 the total must be

a multiple of 10

and

a multiple of 3"

Is she correct?

You **must** show your working.

[2 marks]

e.g. 10 + 20 + 40 = 70

70 is a multiple of 10, but 70 ÷ 3 = 23.33...

so 70 is not a multiple of 3. She is not correct.

Answer No

Do not write outside the box

11 A fair spinner has 12 equal sections.

Label each section A, B, C or D so that when the arrow is spun,

the probability it lands on A is $\frac{1}{6}$

the probability it lands on B is **equal** to the probability it lands on C

the probability it lands on D is **double** the probability it lands on A.

[3 marks]

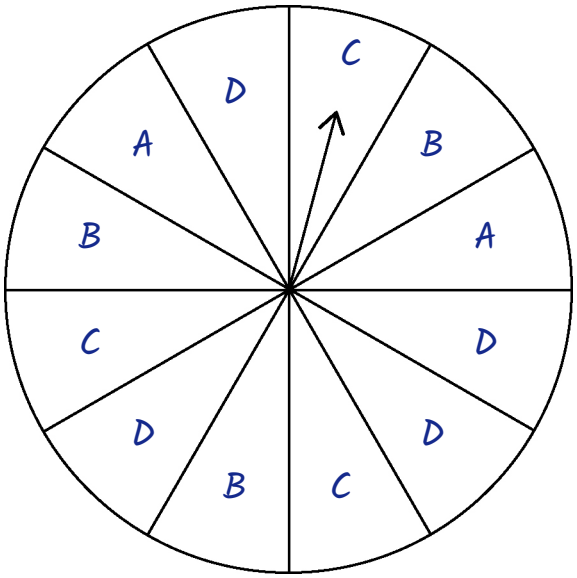

Turn over for the next question

5

Do not write outside the box

12 $a - b = 5$

12 (a) Work out the value of $2(a - b)$

[1 mark]

$2(a - b) = 2 \times 5 = 10$

Answer 10

12 (b) Work out the value of $7a - 7b$

[1 mark]

$7a - 7b = 7(a - b) = 7 \times 5 = 35$

Answer 35

12 (c) Work out the value of $b - a$

[1 mark]

$b - a = -(a - b) = -5$

Answer -5

Do not write outside the box

13 A cube has edge length 0.9 metres.

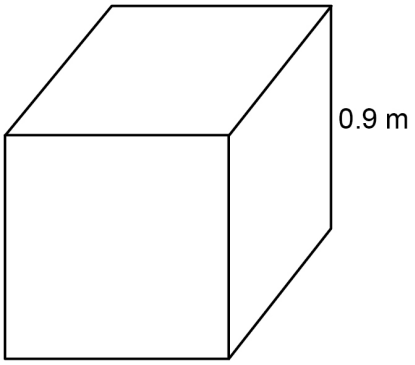

Work out the **total** surface area of the cube.

Give your answer in **square centimetres**.

[3 marks]

0.9 m = 90 cm

Area of one face = 90 × 90 = 8100 cm^2

Total = 6 × 8100 = 48 600 cm^2

Answer 48 600 cm^2

Turn over for the next question

6

Do not write outside the box

14 £1700 is invested for 3 years at 4% per year **simple** interest.

Work out the total interest.

[3 marks]

4% of £1700 = 0.04 × 1700 = £68 per year

3 years: 68 × 3 = £204

Answer £ 204

Do not write outside the box

15 Here is a map showing two towns, *P* and *Q*.

Scale: 1 cm represents 50 km

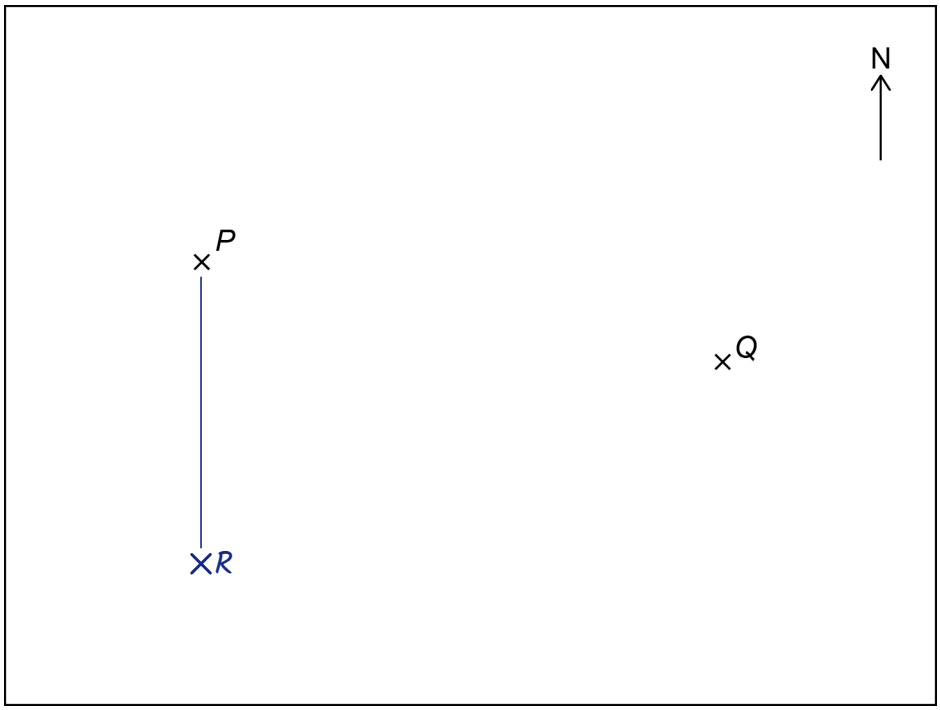

15 (a) Work out the **actual** distance between towns *P* and *Q*.

[2 marks]

PQ = 7 cm on the map

7 × 50 = 350 km

Answer 350 km

15 (b) Town *R* is 200 km due South of town *P*.

Mark *R* on the map.

[2 marks]

200 ÷ 50 = 4 cm due South of P

7

Turn over ►

Do not write outside the box

16 A train has 1 first-class carriage and 6 standard carriages.

The first-class carriage has 64 seats.

$\frac{3}{8}$ are being used.

Each standard carriage has 78 seats.

$\frac{7}{13}$ in each carriage are being used.

Are **more than** half the seats on the train being used?

You **must** show your working.

[5 marks]

First class used: 64 × 3 ÷ 8 = 24 seats

Standard used: 78 × 7 ÷ 13 = 42 seats per carriage

6 × 42 = 252 seats

Seats used = 24 + 252 = 276

Total seats = 64 + 6 × 78 = 64 + 468 = 532

Half of the seats = 532 ÷ 2 = 266

276 > 266

so more than half the seats are being used.

Answer Yes

Do not write outside the box

17 Circle the equation which has the solution $x = 6$

[1 mark]

$x - 3 = \frac{x}{2}$ $\quad$ $x = \frac{3 + x}{2}$ $\quad$ $3x = 36$ $\quad$ $\frac{x}{6} = 0$

18 x is greater than 5 **and** less than or equal to 9

Circle the inequality that shows this.

[1 mark]

$5 \leqslant x < 9$ $\quad$ $5 > x \geqslant 9$ $\quad$ $5 \leqslant x > 9$ $\quad$ $5 < x \leqslant 9$

Turn over for the next question

7

Do not write outside the box

19 The following data comes from a large sample survey of the audience at a concert.

	Percentage	Mean age (years)	Age range (years)
Male	17%	20.3	6
Female	83%	25.7	28

Make **three** comparisons of males and females at the concert.
Use the headings given.

[3 marks]

Proportion of the audience *There were more females than males.*

Average age *On average the females were older (higher mean).*

Spread of ages *The females' ages were more spread out (higher range).*

Do not write outside the box

20 In a tennis tournament,

98 players took part in the singles only

34 players took part in the doubles only

twice as many players took part in the singles as took part in the doubles.

How many players took part in both the singles **and** the doubles?
You may use the Venn diagram to help you.

[4 marks]

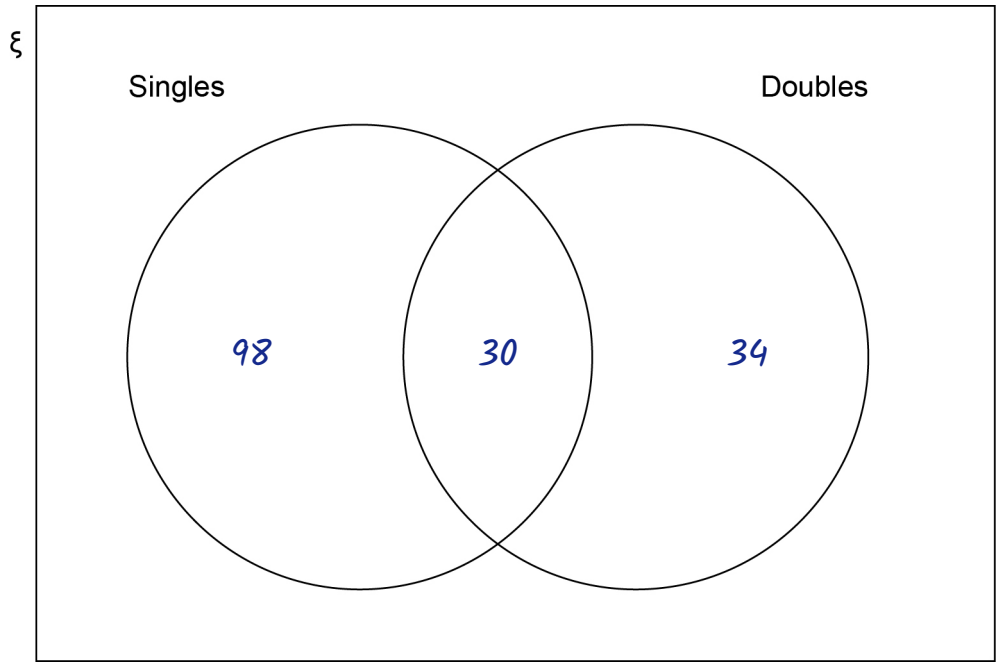

Let x = number in both. Singles = $98 + x$, Doubles = $34 + x$

$98 + x = 2(34 + x)$

$98 + x = 68 + 2x$

$98 - 68 = 2x - x$

$x = 30$

Answer 30

7

Turn over ►

Do not write outside the box

21 The distance by road from Newport to London is 140 miles.

Tom travels by coach from Newport to London.
The coach leaves Newport at 1.30 pm

21 (a) He assumes the coach will travel at an average speed of 50 mph

Use his assumption to work out the arrival time in London.

[3 marks]

Time = 140 ÷ 50 = 2.8 hours

0.8 × 60 = 48 minutes, so 2 hours 48 minutes

1.30 pm + 2 h 48 min = 4.18 pm

Answer 4.18 pm

21 (b) In fact, the coach has a lower average speed.

How does this affect the arrival time?

[1 mark]

The coach will arrive later than 4.18 pm.

Do not write outside the box

22 *ABCD* is a parallelogram.

AB = *BP*

Not drawn accurately

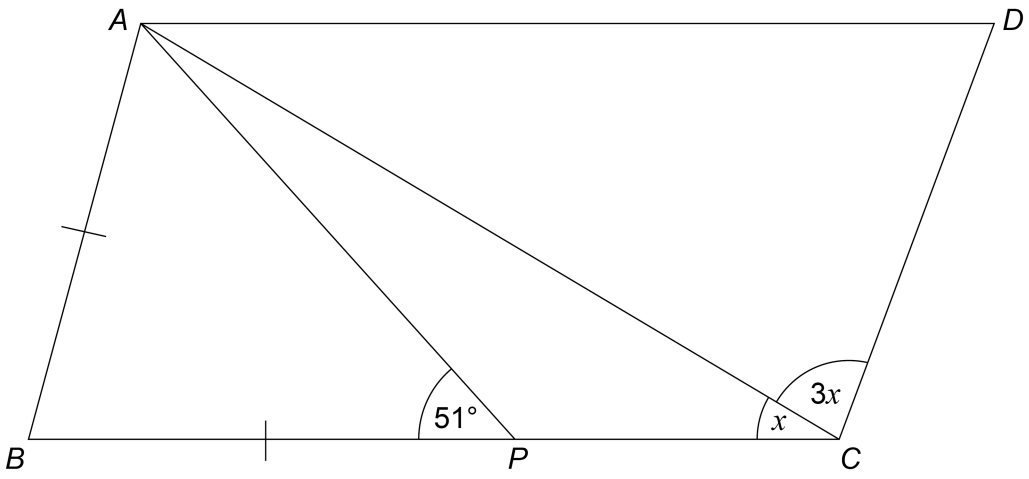

Work out the size of angle x.

[4 marks]

AB = BP so triangle ABP is isosceles: angle BAP = 51°

Angle ABP = 180 − 51 − 51 = 78° (angles in a triangle add to 180°)

Co-interior angles add up to 180° (AB is parallel to DC)

Angle BCD = 180 − 78 = 102°

x + 3x = 4x = 102

x = 102 ÷ 4 = 25.5

Answer 25.5 degrees

Turn over for the next question

8

Do not write outside the box

23 Show that 268 can be written as the sum of a power of 3 and a square number.

[2 marks]

Powers of 3: 3, 9, 27, 81, 243

$268 - 243 = 25 = 5^2$ (a square number)

$268 = 243 + 25 = 3^5 + 5^2$

Answer $3^5 + 5^2$

Do not write outside the box

24 y is inversely proportional to x and k is a constant.

Circle the correct equation.

[1 mark]

$y = \frac{k}{x}$ $\quad$ $y = kx$ $\quad$ $y = \frac{x}{k}$ $\quad$ $y = x - k$

25

$$\text{pressure} = \frac{\text{force}}{\text{area}}$$

Work out the **force** when the pressure is 24 N/m^2 and the area is 3 m^2
Circle your answer.

[1 mark]

0.125 N $\quad$ 8 N $\quad$ 27 N $\quad$ 72 N

Turn over for the next question

4

Do not write outside the box

26 42 men and 38 women visit a restaurant.

44 of these people have a voucher.

Three times as many men as women do **not** have a voucher.

26 (a) Complete the frequency tree.

[4 marks]

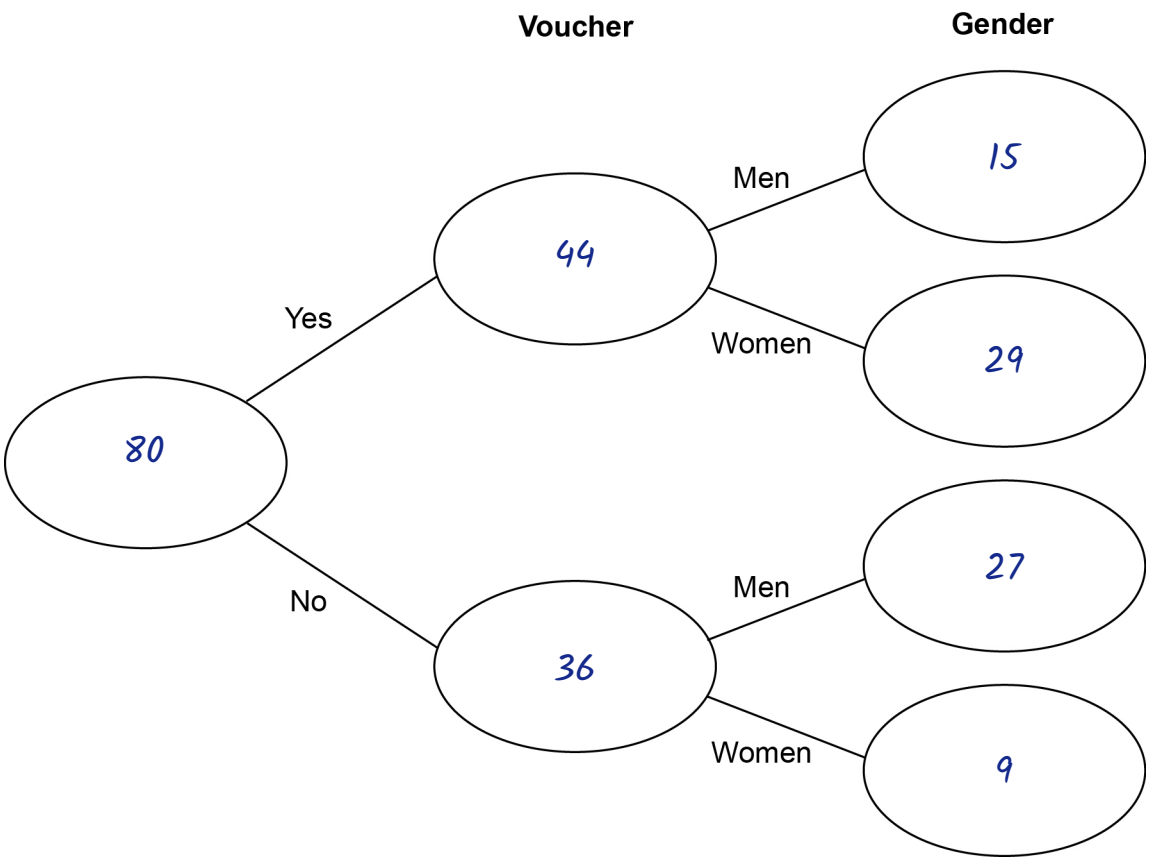

stemup.co.uk

Do not write outside the box

26 (b) A voucher takes **15% off** the bill.

After using the voucher, the bill for a meal is £27.20

How much was the bill before using the voucher?

[3 marks]

100% − 15% = 85% = 0.85

27.20 ÷ 0.85 = 32

Bill before voucher = £32.00

Answer £ 32.00

Turn over for the next question

7

Do not write outside the box

27 (a) Rearrange $v = u + at$ to make t the subject of the formula.

[2 marks]

$v - u = at$

$t = (v - u) \div a$

Answer $t = \frac{v - u}{a}$

27 (b) Complete this table with consistent metric units.

[2 marks]

Distance	Time	Speed	Acceleration
m	s	m/s	m/s^2

Do not write outside the box

28 Multiply out and simplify $(x-8)^2$

[2 marks]

$(x-8)(x-8)$

$= x^2 - 8x - 8x + 64$

$= x^2 - 16x + 64$

Answer $x^2 - 16x + 64$

END OF QUESTIONS

6

Do not write outside the box

There are no questions printed on this page

DO NOT WRITE ON THIS PAGE
ANSWER IN THE SPACES PROVIDED

Do not write outside the box

There are no questions printed on this page

DO NOT WRITE ON THIS PAGE
ANSWER IN THE SPACES PROVIDED

Do not write outside the box

There are no questions printed on this page

DO NOT WRITE ON THIS PAGE
ANSWER IN THE SPACES PROVIDED

Copyright Information

For confidentiality purposes, from the November 2015 examination series, acknowledgements of third party copyright material will be published in a separate booklet rather than including them on the examination paper or support materials. This booklet is published after each examination series and is available for free download from www.aqa.org.uk after the live examination series.

Permission to reproduce all copyright material has been applied for. In some cases, efforts to contact copyright-holders may have been unsuccessful and AQA will be happy to rectify any omissions of acknowledgements. If you have any queries please contact the Copyright Team, AQA, Stag Hill House, Guildford, GU2 7XJ.

Copyright © 2017 AQA and its licensors. All rights reserved.