Please write clearly in block capitals.

Centre number | | | | | | Candidate number | | | | |

Surname _____

Forename(s) _____

Candidate signature _____

GCSE MATHEMATICS

F

Foundation Tier Paper 3 Calculator

Tuesday 11 June 2019 Morning Time allowed: 1 hour 30 minutes

Materials

For this paper you must have:
- a calculator
- mathematical instruments.

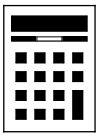

Instructions

- Use black ink or black ball-point pen. Draw diagrams in pencil.
- Fill in the boxes at the top of this page.
- Answer **all** questions.
- You must answer the questions in the spaces provided. Do not write outside the box around each page or on blank pages.
- Do all rough work in this book. Cross through any work you do not want to be marked.

Information

- The marks for questions are shown in brackets.
- The maximum mark for this paper is 80.
- You may ask for more answer paper, graph paper and tracing paper. These must be tagged securely to this answer book.

Advice

In all calculations, show clearly how you work out your answer.

For Examiner's Use	
Pages	Mark
2–3	
4–5	
6–7	
8–9	
10–11	
12–13	
14–15	
16–17	
18–19	
20–21	
22–23	
24–25	
26	
TOTAL	

Do not write outside the box

Answer **all** questions in the spaces provided

1 Circle the value of the digit 2 in the answer to $5200 \div 10$

[1 mark]

2 20 200 2000

2 Solve $x - 8 = 5$

Circle your answer.

[1 mark]

$x = -13$ $x = -3$ $x = 3$ $x = 13$

3 Circle the fraction that is equal to $2\frac{1}{4}$

[1 mark]

$\frac{7}{4}$ $\frac{9}{4}$ $\frac{21}{4}$ $\frac{25}{4}$

Do not write outside the box

4 Circle the expression which means x divided by y

[1 mark]

$\frac{x}{y}$ $\frac{y}{x}$ $\frac{1}{xy}$ $\frac{1}{x+y}$

5 Put these numbers in order from smallest to largest.

$\frac{31}{40}$ $\frac{3}{4}$ $\frac{7}{10}$ 0.725

[2 marks]

Smallest _____

_____

_____

Largest _____

6

Turn over ►

Do not write outside the box

6 Josh downloads album A.

A has 11 tracks.

Each track on A costs the same.

The total cost of downloading A is £8.80

Josh also downloads album B.

B has 14 tracks.

6 (a) Work out the total cost of downloading B.

Assume each track costs the same as a track on A.

[3 marks]

Answer £ _____

Do not write outside the box

6 (b) In fact, compared to the cost of each track on A

the cost of 6 tracks on B is **more** by 5p each

the cost of 8 tracks on B is **less** by 5p each.

What does this tell you about your answer to part (a)?

Tick **one** box.

☐ The total cost is **less** than my answer to part (a)

☐ The total cost is **more** than my answer to part (a)

☐ The total cost is **the same** as my answer to part (a)

Give a reason for your decision.

[2 marks]

Turn over for the next question

5

Do not write outside the box

7 The pictogram shows information about the houses in a street.

Each house has 3, 4 or 5 bedrooms.

Key: represents 2 houses

3-bedroom houses	
4-bedroom houses	
5-bedroom houses	

In total, how many bedrooms do these houses have?

[3 marks]

Answer _____

Do not write outside the box

8 Four positive whole numbers add up to 84

One of the numbers is a multiple of 17

The other three numbers are equal.

What are the four numbers?

[3 marks]

Answer _____ _____ _____ _____

Turn over for the next question

6

Do not write outside the box

9 Jim wants to buy 10 rolls of wallpaper.

He sees these prices.

Wallpaper	
Single roll	£12.50
Pack of 3 rolls	£34.50
Pack of 5 rolls	£58.75

What is the cheapest price for 10 rolls?

[4 marks]

Answer £ _____

Do not write outside the box

10 In rectangle *ABCD*

triangle *ABE* is equilateral

triangle *CDE* is isosceles, with *CE* = *DE*

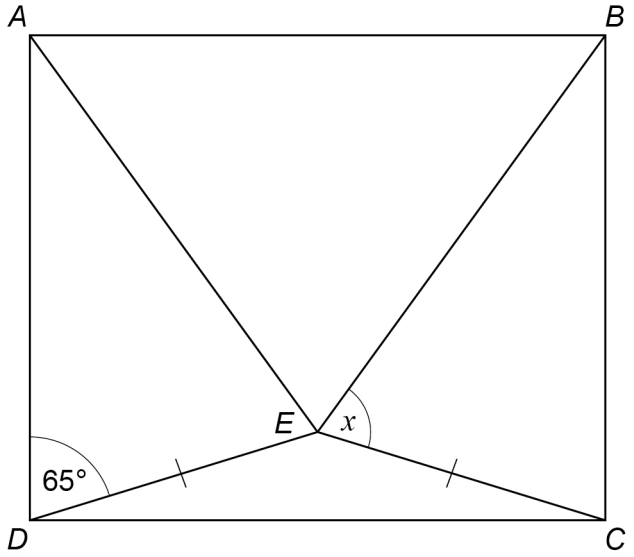

Not drawn accurately

Work out the size of angle x.

[4 marks]

Answer _____ degrees

8

Turn over ►

Do not write outside the box

11 (a) Complete the number machine.

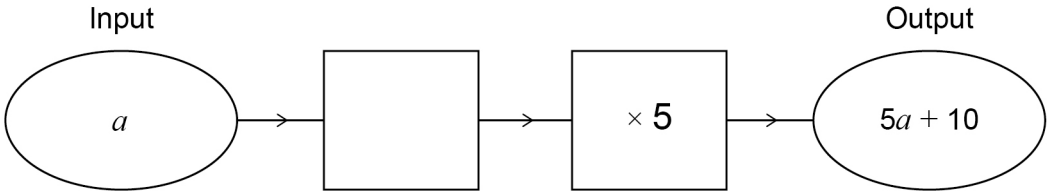

[1 mark]

11 (b) Write down the output y in terms of x.

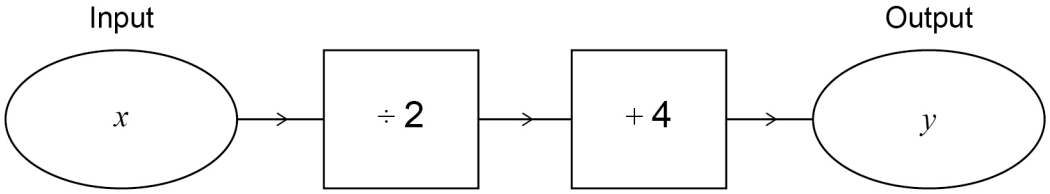

[1 mark]

Answer _____

Do not write outside the box

12 The first four triangular numbers are 1, 3, 6, 10

Circle the next triangular number.

[1 mark]

14 15 16 19

13 Write down **all** the prime numbers between 40 and 50

[2 marks]

Answer _____

Turn over for the next question

5

Do not write outside the box

14 In this question use

1 cubic foot = 6.23 gallons

1 cubic foot = 0.028 cubic metres

Convert 3115 gallons into cubic metres.

[3 marks]

Answer _____ m^3

Do not write outside the box

15 Circle the correct statement.

[1 mark]

$\frac{1}{3} \leqslant 30\%$ $\frac{1}{3} = 30\%$ $\frac{1}{3} < 30\%$ $\frac{1}{3} \neq 30\%$

16 Which shape **must** have rotational symmetry?

Circle your answer.

[1 mark]

isosceles triangle trapezium kite parallelogram

Turn over for the next question

5

Do not write outside the box

17 A shop sells ice creams.

Each ice cream has two scoops.

The possible flavours are vanilla (V), strawberry (S), chocolate (C) and mint (M).

The two scoops can be the same flavour or different flavours.

17 (a) List **all** the possible options for the two scoops.

[2 marks]

Do not write outside the box

17 (b) In one hour the shop sells 180 scoops of ice cream.

The number of scoops of each flavour is shown in the table.

Flavour	Vanilla	Strawberry	Chocolate	Mint
Number of scoops	45	75	50	10

Complete the pie chart to represent the data.

[4 marks]

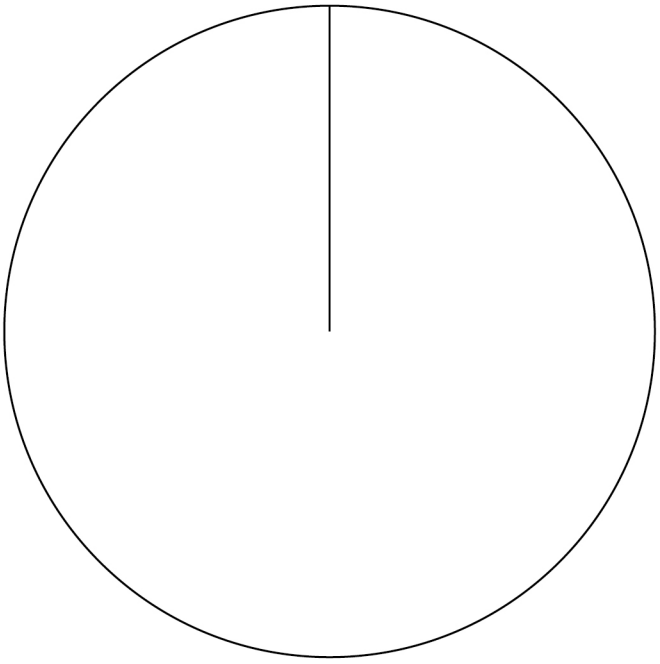

6

Turn over ►

Do not write outside the box

18 On the grid, draw an enlargement of the triangle with scale factor $\frac{1}{2}$

[2 marks]

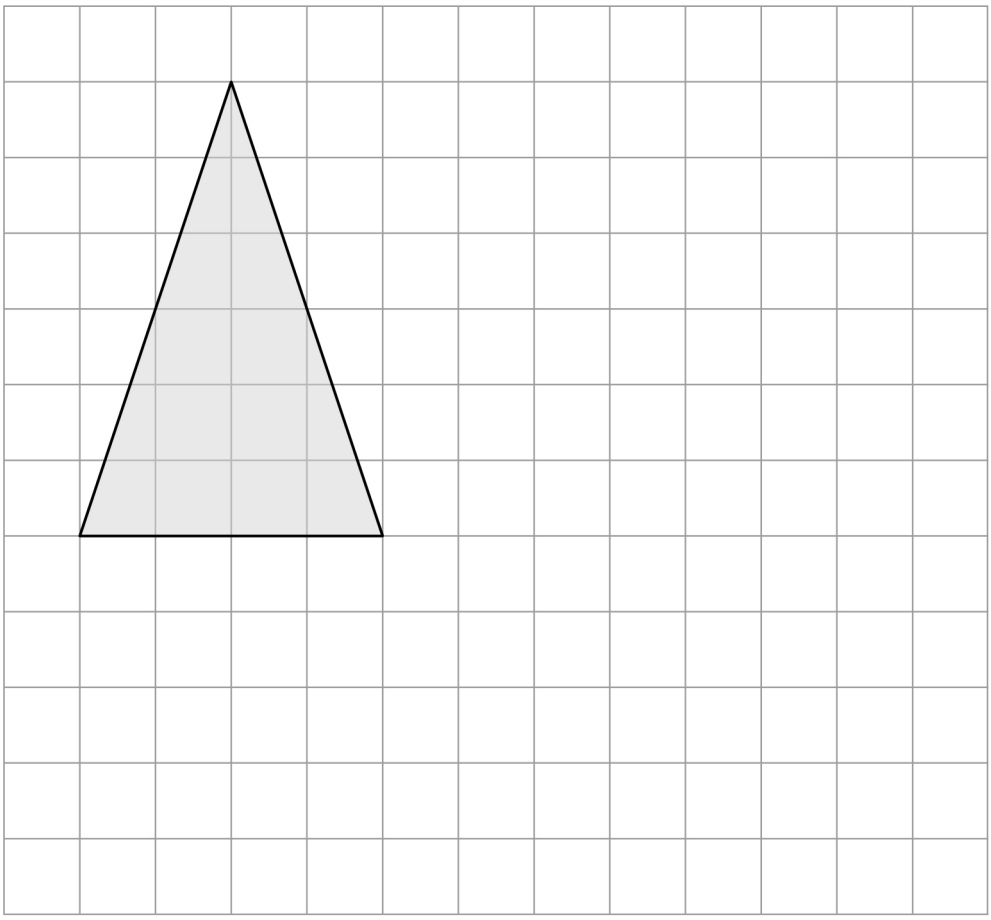

Do not write outside the box

19 (a) Simplify fully $3a^2 + 7a + 3 - a^2 + 8a - 4$

[3 marks]

Answer _____

19 (b) Factorise fully $24y^2 - 20y$

[2 marks]

Answer _____

20 Solve $x^2 = 196$

[2 marks]

Answer _____

9

Turn over ►

Do not write outside the box

21 To the nearest pound, Jon has £9

To the nearest 50p, Ellie has £6.50

Work out the maximum possible total amount of money.

[3 marks]

Answer £_____

Do not write outside the box

22 Here is a formula.

$$T = n^2 - \frac{12}{n}$$

22 (a) Work out T when $n = 5$

[1 mark]

Answer _____

22 (b) Why is T **always** positive when n is negative?

[2 marks]

6

Turn over ►

Do not write outside the box

23 In one hour a machine can make

600 nuts

or

720 bolts.

At 3 pm the machine starts working.

It makes 900 nuts and then changes to making bolts.

How many **bolts** will the machine make by 8 pm?

[4 marks]

Answer _____

Do not write outside the box

24 Two solids, J and K, have the same density.

Complete the table.

Include units in your answers.

[3 marks]

	J	**K**
Mass	48 g	78 g
Volume	8 cm^3	
Density		

Turn over for the next question

7

Do not write outside the box

25 Towns *P*, *Q* and *R* are connected by roads *PQ*, *PR* and *QR*.

PR is 10 km longer than *PQ*.

QR is twice as long as *PR*.

The total length of the three roads is 170 km

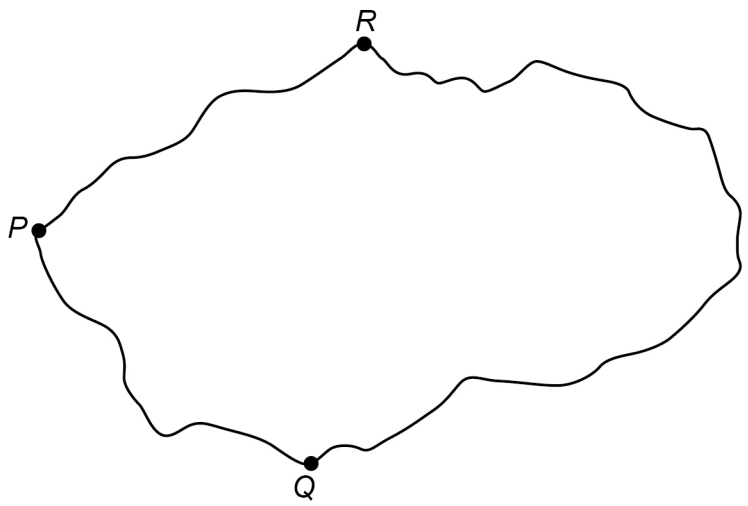

Not drawn accurately

Work out the length of *PQ*.

[4 marks]

Answer _____ km

Do not write outside the box

26 Mia wants to borrow £6000 and repay it, with interest, after two years.

She sees two offers for loans.

Offer 1	**Offer 2**
Compound interest	Compound interest
3% per year	First year 1%
	Second year 5%

Mia says,

"I will pay back the same amount because the average of 1% and 5% is 3%"

Is she correct?

You **must** show your working.

[3 marks]

Turn over for the next question

7

Do not write outside the box

27 Here are two sets of numbers, A and B.

Set A

200	160
104	100

Set B

270	400	483
300	x	

mean of Set A : mean of Set B = 3 : 8

Work out the value of x.

[4 marks]

Answer _____

Do not write outside the box

28 A straight line

has gradient 4

and

passes through the point (5, 23)

Work out the equation of the line.

Give your answer in the form $y = mx + c$

[3 marks]

Answer _____

Turn over for the next question

7

Do not write outside the box

29 Two sides of a triangle have lengths 13 cm and 27 cm

Which of these is a **possible** length of the other side?
Circle your answer.

[1 mark]

13 cm 14 cm 27 cm 40 cm

30 Here is a right-angled triangle.

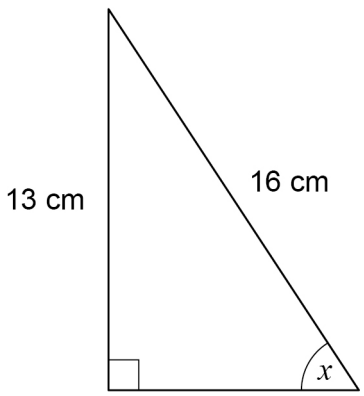

Not drawn accurately

Use trigonometry to work out the size of angle x.

[2 marks]

Answer _____ degrees

END OF QUESTIONS

3

Do not write outside the box

There are no questions printed on this page

DO NOT WRITE ON THIS PAGE
ANSWER IN THE SPACES PROVIDED

Do not write outside the box

There are no questions printed on this page

DO NOT WRITE ON THIS PAGE
ANSWER IN THE SPACES PROVIDED

Copyright information

For confidentiality purposes, from the November 2015 examination series, acknowledgements of third-party copyright material are published in a separate booklet rather than including them on the examination paper or support materials. This booklet is published after each examination series and is available for free download from www.aqa.org.uk after the live examination series.

Permission to reproduce all copyright material has been applied for. In some cases, efforts to contact copyright-holders may have been unsuccessful and AQA will be happy to rectify any omissions of acknowledgements. If you have any queries please contact the Copyright Team, AQA, Stag Hill House, Guildford, GU2 7XJ.

Copyright © 2019 AQA and its licensors. All rights reserved.