AQA

Please write clearly in block capitals.

Centre number | | | | | | Candidate number | | | | |

Surname StemUp Model Solution

Forename(s)

Candidate signature

I declare this is my own work.

AS
PHYSICS

Paper 2

Wednesday 22 May 2024 Afternoon

Time allowed: 1 hour 30 minutes
You are advised to spend about 35 minutes on Section C

Materials

For this paper you must have:
- a pencil and a ruler
- a scientific calculator
- a Data and Formulae Booklet
- a protractor.

Instructions
- Use black ink or black ball-point pen.
- Fill in the boxes at the top of this page.
- Answer **all** questions.
- You must answer the questions in the spaces provided. Do not write outside the box around each page or on blank pages.
- If you need extra space for your answer(s), use the lined pages at the end of this book. Write the question number against your answer(s).
- Do all rough work in this book. Cross through any work you do not want to be marked.
- Show all your working.

Information
- The marks for questions are shown in brackets.
- The maximum mark for this paper is 70.
- You are expected to use a scientific calculator where appropriate.
- A Data and Formulae Booklet is provided as a loose insert.

For Examiner's Use	
Question	Mark
1	
2	
3	
4	
5–34	
TOTAL	

Do not write outside the box

Section A

Answer **all** questions in this section.

0 1 A hacksaw blade is a thin flexible strip of metal.
Figure 1 shows a blade clamped between two blocks above a horizontal bench.
A pen is attached to the free end of the blade.

Figure 1

view of hacksaw blade from side

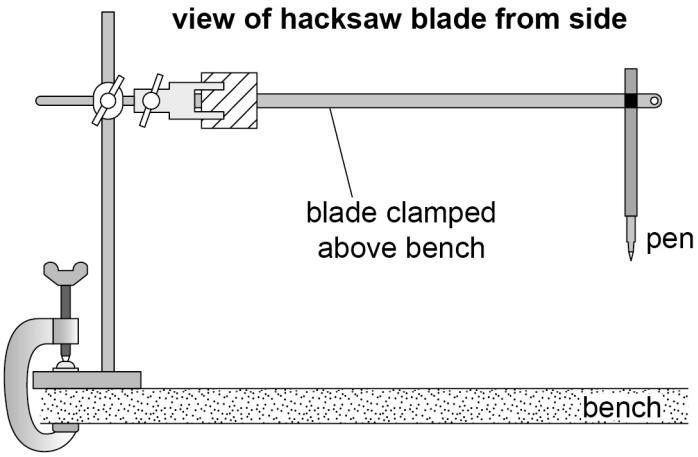

The free end of the blade is displaced and released.
The blade oscillates in a horizontal plane as shown in **Figure 2**.

Figure 2

view of hacksaw blade from above

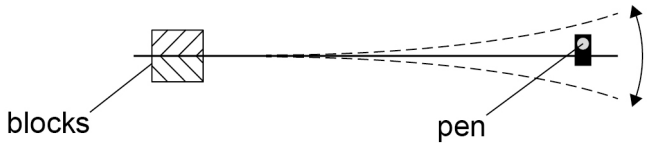

The time for each oscillation is T.

Do not write outside the box

0 1 . 1 **Table 1** shows repeated measurements of $60T$.

Table 1

Measurements of $60T$ / s			
25.20	25.05	24.97	25.10

Show that T is about 0.42 s.

[1 mark]

mean of 60T = (25.20 + 25.05 + 24.97 + 25.10) / 4 = 25.08 s

T = 25.08 / 60 = 0.418 s ≈ 0.42 s

Question 1 continues on the next page

Do not write outside the box

Figure 3 shows a trolley placed on a ramp that is inclined at a small angle to the bench.
A piece of graph paper is fixed to the upper surface of the trolley.
The blade and pen are positioned so that the tip of the pen rests on the graph paper.
The dashed line shows the rest position of the pen.

Figure 3

side view

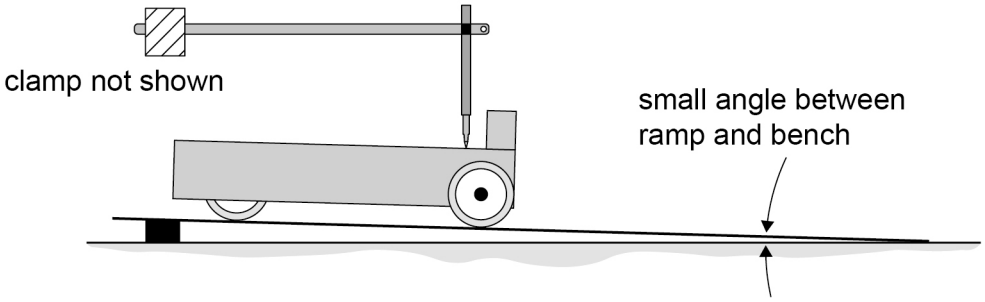

view of trolley from above

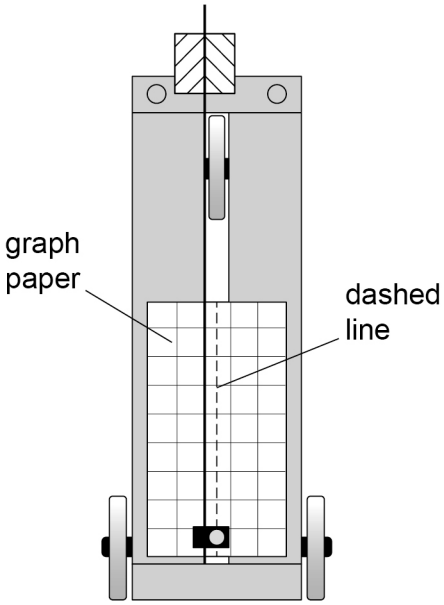

Do not write outside the box

The free end of the blade is displaced as shown in **Figure 4a**.
The blade and the trolley are then both released at the same moment.
The blade oscillates horizontally.
The pen remains in contact with the graph paper as the trolley moves.
Figures 4b and **4c** show the trolley as it moves down the ramp with uniform acceleration.

Figure 4a

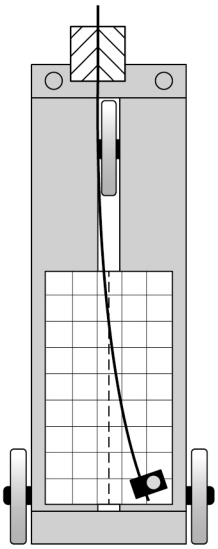

trolley and blade at moment of release

Figure 4b

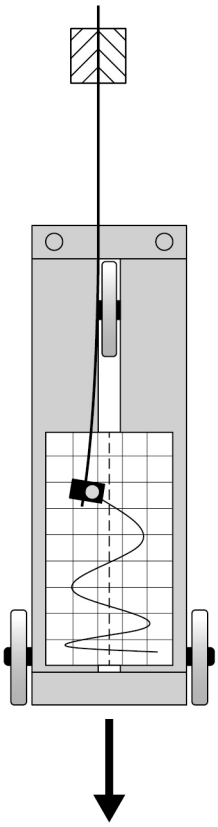

trolley moving down ramp

Figure 4c

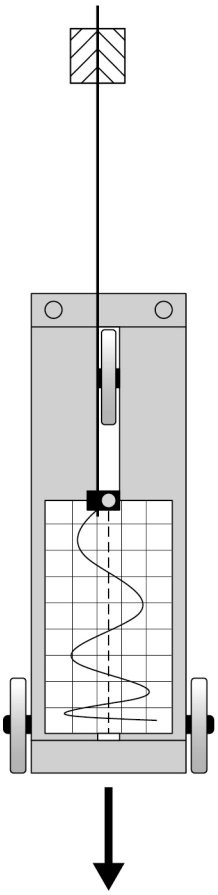

trolley moving down ramp

Question 1 continues on the next page

Do not write outside the box

Figure 5 shows the graph paper.
Points **P** and **Q** mark the start and end of the continuous line drawn by the pen after the trolley is released.

Figure 5

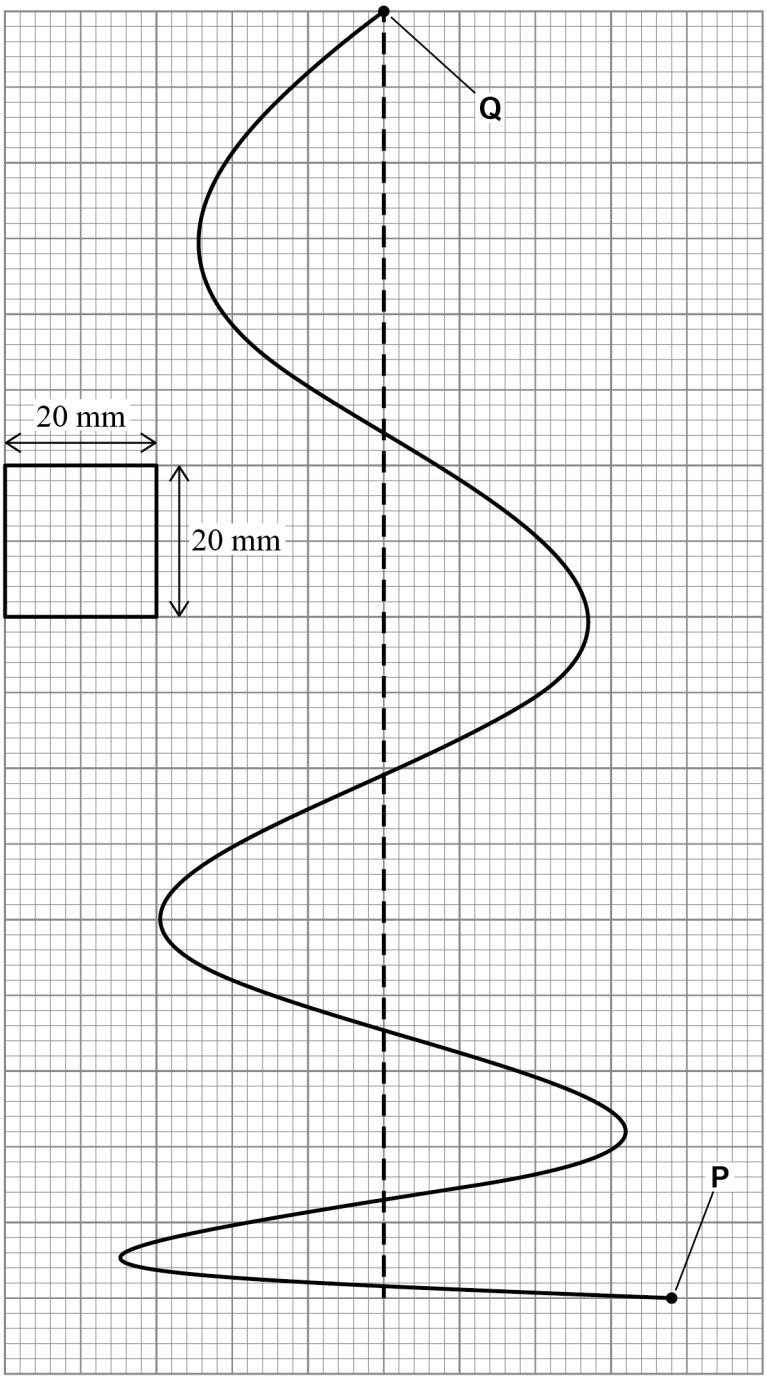

Do not write outside the box

T_{PQ} is the time for the pen to draw the line from **P** to **Q**.
s is the displacement of the trolley during T_{PQ}.

0 1 . 2 Determine T_{PQ}.
Assume that the time for each full oscillation of the blade is 0.42 s.

[2 marks]

Number of oscillations from P to Q = 2.75

T_{PQ} = 2.75 × 0.42

= 1.155 s

T_{PQ} = 1.16 s

0 1 . 3 Determine s.
The scale of the graph paper is shown on **Figure 5**.

[1 mark]

s = 8.5 large squares × 20 mm = 170 mm

s = 0.170 m

0 1 . 4 Determine the acceleration a of the trolley.

[2 marks]

$s = ut + \frac{1}{2}at^2$ with $u = 0$, so $a = 2s / T_{PQ}^2$

$a = (2 \times 0.170) / 1.155^2$

$= 0.255$ m s^{-2}

a = 0.25 m s^{-2}

Question 1 continues on the next page

Do not write outside the box

0 1 . 5 A teacher suggests that the absolute uncertainty in s is ± 2 mm.

Explain why this is a valid suggestion.

[2 marks]

The resolution of the graph paper is 2 mm (one small square), so the uncertainty in reading the position of each of P and Q is ±1 mm (half a division).

s is found from two readings (P and Q), so the absolute uncertainties are added: ±1 mm + ±1 mm = ±2 mm.

0 1 . 6 The percentage uncertainty in T_{PQ} is 0.46%.

Determine the percentage uncertainty in your result for a.

[2 marks]

% uncertainty in s = (2 / 170) × 100 = 1.2 %

$a = 2s / T_{PQ}^2$, so % in a = % in s + 2 × % in T_{PQ}

= 1.2 + (2 × 0.46) = 1.2 + 0.92

= 2.1 %

percentage uncertainty = 2.1 %

Do not write outside the box

0 1 . 7 **Figure 6** is a diagram drawn by a student to explain why the trolley accelerates. The diagram is incomplete because the student has ignored the friction forces involved.

Figure 6

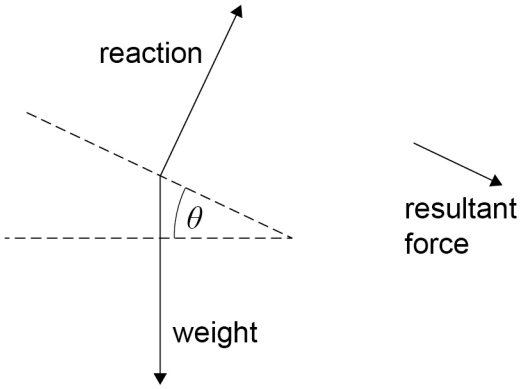

Using **Figure 6** it can be shown that:

$$g = \frac{a}{\sin\theta}$$

where a is the acceleration of the trolley.

The student determines g using this equation.

State and explain how the student's value of g compares with $9.81\ \mathrm{m\ s^{-2}}$.

[2 marks]

Friction acts up the slope, so the resultant force down the slope is lower than mg sin θ (ma = mg sin θ − F). The measured acceleration a is therefore smaller than it would be without friction.

So the student's value of g = a / sin θ is less than 9.81 m s^{-2}.

12

Turn over for the next question

Do not write outside the box

0 2 The Brinell test determines the hardness of the surface of a material.
Figure 7 shows a steel sphere on the surface of a material being tested.

Figure 7

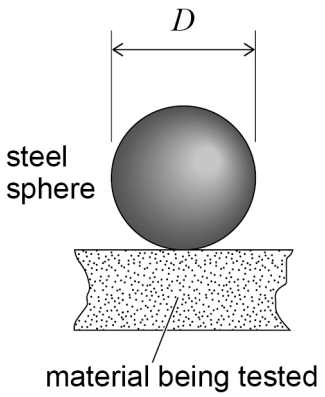

In the test, a load F is applied to a steel sphere of diameter D and an indentation of depth h is produced in the material. **Figure 8** shows one test.

Figure 8

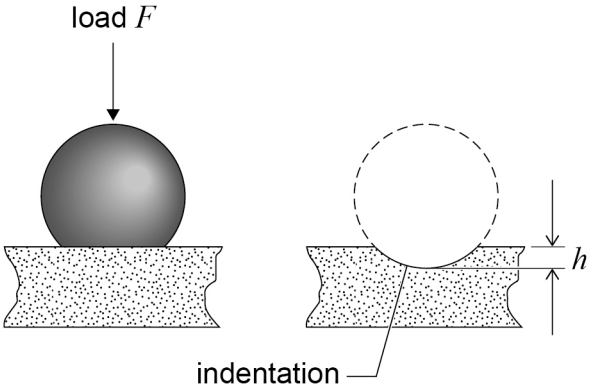

The Brinell hardness number B is given by

$$B = \frac{F}{\pi g D h}$$

where F is in N, g is in $\mathrm{N\ kg^{-1}}$ and D and h are in mm.
The unit of B is $\mathrm{kg\ mm^{-2}}$.

Using the same steel sphere, the value of h was measured for five materials.
B was calculated for each material.

For each material:

- F was the same
- $D = 10.0$ mm.

Do not write outside the box

Figure 9 is a plot of B against h.

Figure 9

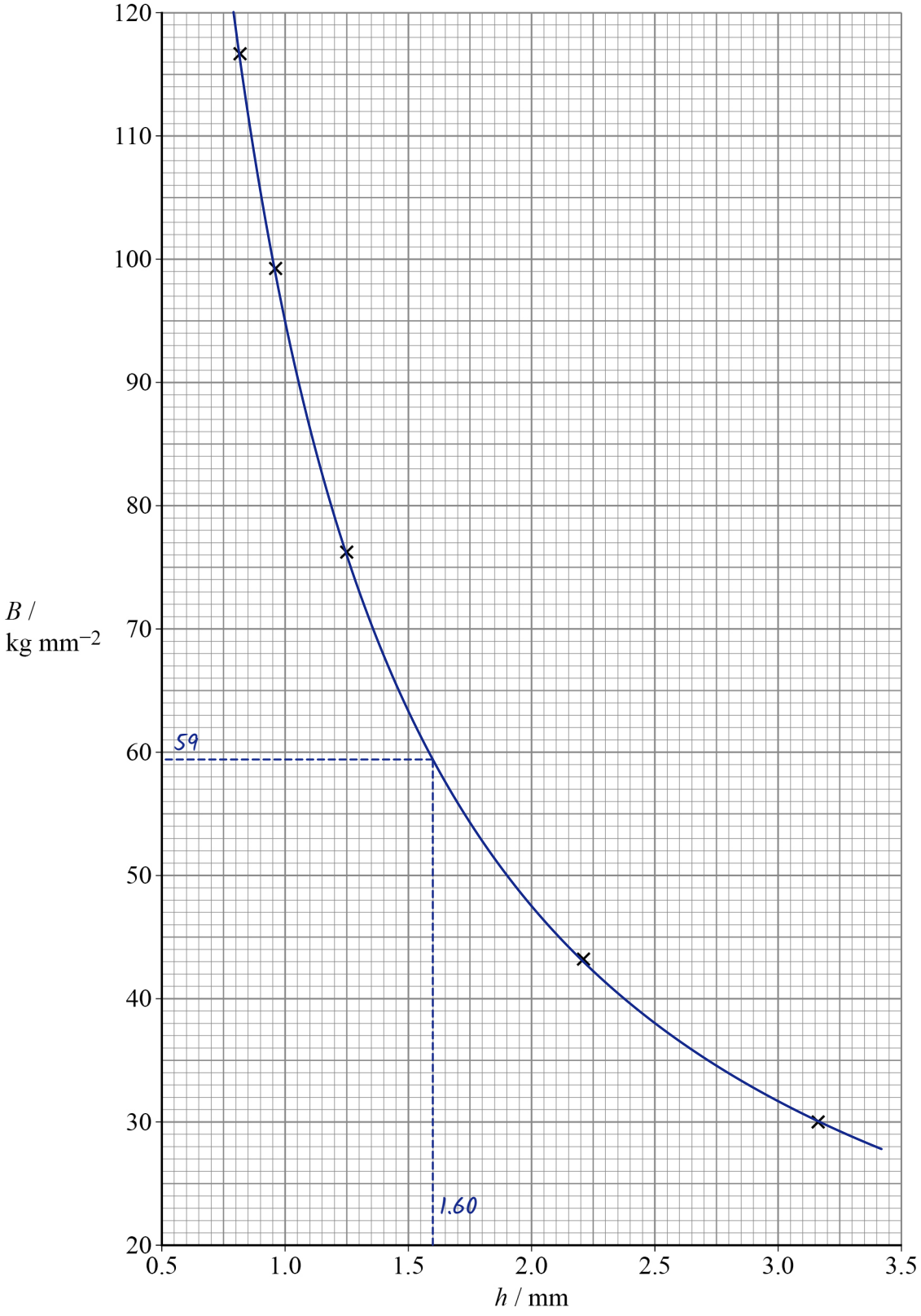

Question 2 continues on the next page

Do not write outside the box

0 2 . 1 Determine the value of F that was used to produce **Figure 9**.

[1 mark]

From Figure 9, at $h = 3.15$ mm, $B = 30$ kg mm^{-2}

$F = B\pi g D h = 30 \times \pi \times 9.81 \times 10.0 \times 3.15$

$= 2.9 \times 10^4$ N

$F =$ 2.9×10^4 N

0 2 . 2 Brass was not one of the five materials tested.
When brass was tested using these values of F and D, the value of $h = 1.60$ mm.

Determine, using **Figure 9**, B for brass.

[2 marks]

Read off the curve at $h = 1.60$ mm: $B = 59$ kg mm^{-2}

(check: $B = 2.9 \times 10^4 / (\pi \times 9.81 \times 10.0 \times 1.60) = 59$)

B for brass = 59 kg mm^{-2}

0 2 . 3 B for lead is about 5 kg mm^{-2}.

Show that this result cannot be obtained with the steel sphere and the value of F used to produce **Figure 9**.
Go on to suggest how the test can be modified to determine B for lead.

[2 marks]

$h = F / (\pi g D B) = 2.9 \times 10^4 / (\pi \times 9.81 \times 10.0 \times 5) = 19$ mm. This is bigger than the 10 mm diameter of the sphere, so the sphere would be pushed completely into the lead: $B = 5$ cannot be measured. Modify the test by using a much smaller load F (or a sphere with a larger diameter D).

Do not write outside the box

The Brinell hardness number can be determined by measuring the diameter d of the circular indentation rather than h.

Figure 10 shows d.

Figure 10

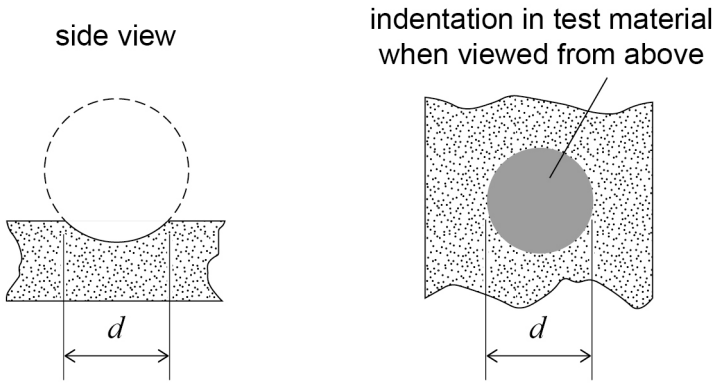

For the indentation created in brass, $d = 7.33$ mm.

0 2 . 4 Suggest a suitable instrument that could have been used to measure this value of d.

[1 mark]

A travelling microscope (or a digital vernier calliper).

0 2 . 5 For the indentation created in brass, $h = 1.60$ mm.

Explain **one** advantage of finding B by measuring d rather than h.

[2 marks]

d (7.33 mm) is much larger than h (1.60 mm). For the same resolution of measuring instrument, the percentage uncertainty in d is therefore smaller than in h, so B is found more precisely.

8

END OF SECTION A

Do not write outside the box

Section B

Answer **all** questions in this section.

0 3 **Figure 11** shows an energy storage system. The system uses a load suspended from two long steel cables in a vertical tunnel. Energy is stored when the load is raised. Electricity is generated when the load falls.

Figure 11

not to scale

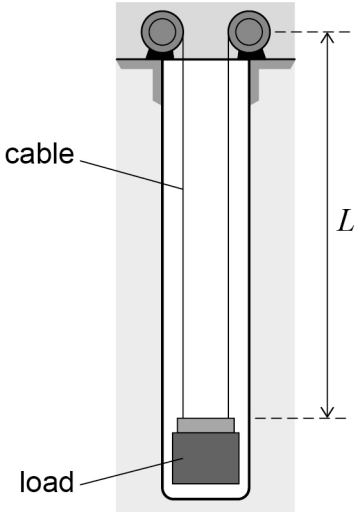

When the load is at its lowest point, each cable has a vertical length L.
The total mass of the two vertical cables is 3.7×10^4 kg.
Each cable has a cross-sectional area of 9.6×10^{-3} m^2.

0 3 . 1 Calculate L.

density of steel = 7.4×10^3 kg m^{-3}

[2 marks]

ρ = m / V, so total V = 3.7 × 10⁴ / 7.4 × 10³ = 5.0 m³

volume of each cable = 5.0 / 2 = 2.5 m³

V = AL, so L = 2.5 / 9.6 × 10⁻³ = 260 m

L = 260 m

Do not write outside the box

0 3 . 2 The load is accelerated from its lowest point. The mass of the load is 2.8×10^5 kg.

The maximum tension in each cable is 1.6×10^6 N during the acceleration.

Calculate the initial acceleration of the load.

[4 marks]

total tension = $2 \times 1.6 \times 10^6 = 3.2 \times 10^6$ N

weight of load = $2.8 \times 10^5 \times 9.81 = 2.75 \times 10^6$ N

weight of cables = $3.7 \times 10^4 \times 9.81 = 3.63 \times 10^5$ N

resultant force $F = T - W = 3.2 \times 10^6 - 3.11 \times 10^6 = 9.0 \times 10^4$ N

mass accelerated = $2.8 \times 10^5 + 3.7 \times 10^4 = 3.17 \times 10^5$ kg

$F = ma$, so $a = 9.02 \times 10^4 / 3.17 \times 10^5$

$= 0.28$ m s^{-2}

initial acceleration = 0.28 m s^{-2}

0 3 . 3 For safety, the breaking stress of each steel cable must be at least three times the maximum stress produced during the initial acceleration.

breaking stress for steel = 890 MPa

Deduce whether this system operates safely.

[2 marks]

max stress = $F / A = 1.6 \times 10^6 / 9.6 \times 10^{-3} = 1.67 \times 10^8$ Pa = 167 MPa

3×167 MPa = 500 MPa

500 MPa is less than the breaking stress of 890 MPa (890 / 167 = 5.3, more than 3), so the system operates safely.

Question 3 continues on the next page

Do not write outside the box

0 3 . 4 A village combines the storage system with a wind turbine to provide energy.
Figure 12 shows how the output power of the wind turbine varies with time during one particular day.
The power demand of the village is also shown.

Figure 12

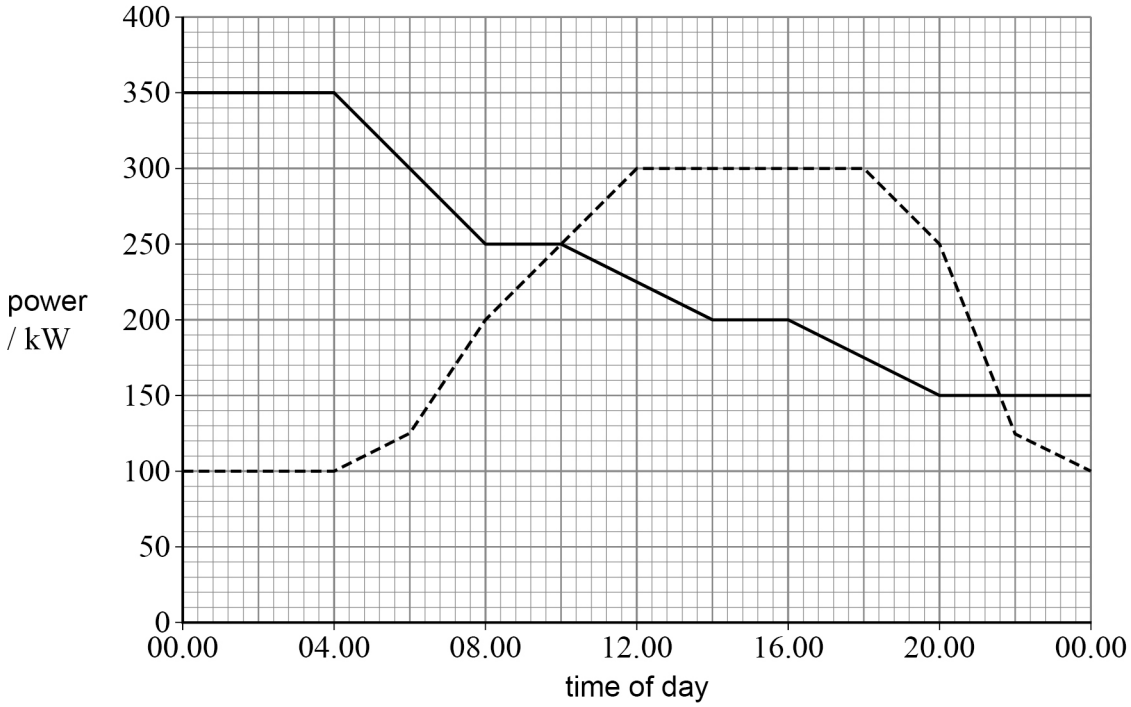

Key
——— turbine output
- - - - - demand of village

When the power demand is greater than the output power of the wind turbine, the load in the storage system descends and generates electricity to match the demand.
When the load has fully descended and the storage system is empty, electrical power is provided by the National Grid.

The efficiency of the energy transfer from the storage system to the village is 85%.
The maximum energy stored by the storage system is 760 MJ.

Do not write outside the box

Deduce whether the storage system and the wind turbine can together provide all the electrical energy needed by the village from 10.00 until 14.00.

[4 marks]

Demand 10.00 to 14.00 = area under dashed line

= (275 kW × 2 h) + (300 kW × 2 h) = 1150 kW h

Turbine output = area under solid line = 225 kW × 4 h = 900 kW h

Shortfall = 1150 − 900 = 250 kW h

1 kW h = 1000 W × 3600 s = 3.6×10^6 J

Shortfall = 250 × 3.6×10^6 J = 9.0×10^8 J = 900 MJ

Useful energy from store = 0.85 × 760 MJ = 646 MJ

646 MJ < 900 MJ

(or: supply = 3240 MJ + 646 MJ = 3890 MJ < demand of 4140 MJ)

No: the store can supply only 646 MJ, less than the 900 MJ shortfall, so the Grid is needed.

12

Turn over for the next question

Do not write outside the box

0 4 **Figure 13** shows an arrangement used to determine the thickness of metal foil using interference of light.

Figure 13

not to scale

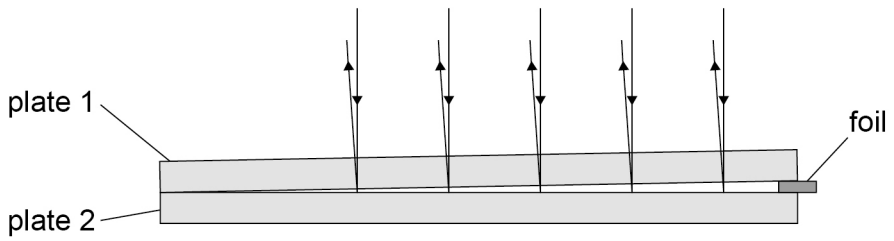

Two thin glass plates are separated by the foil at one end. Monochromatic light is incident on the glass plates from above. A series of bright fringes is observed when viewed from above, as shown in **Figure 14**.

Figure 14

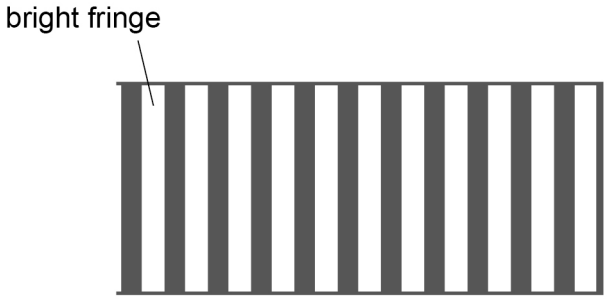

Do not write outside the box

Figure 15 shows part of the arrangement where a bright fringe occurs.

The angle between the two plates caused by the foil in **Figure 13** is very small. This allows the following approximations to be made for **Figure 15**:

- the plates are parallel to each other
- the light rays travel perpendicular to both plates.

Figure 15

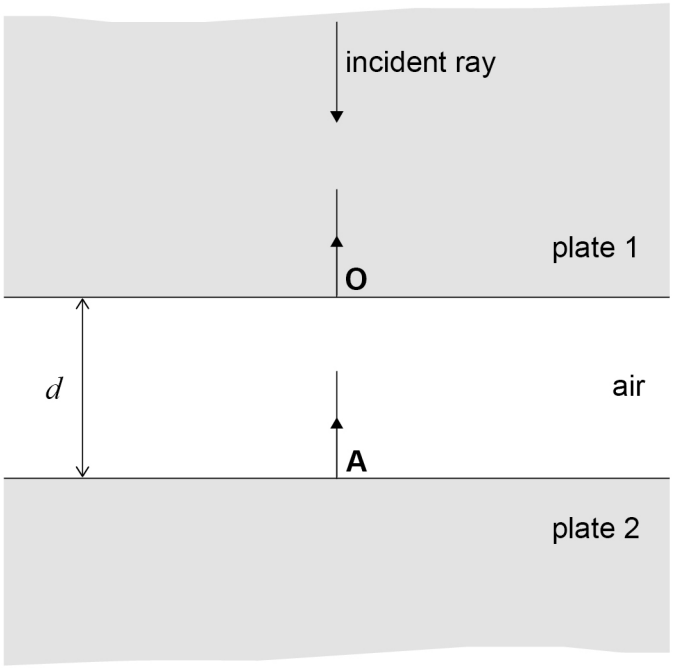

Some of the incident light is reflected at **O**. The remainder of the light is transmitted through the air gap and is reflected at **A**.

The reflected light from **A** combines at **O** with the reflected light from **O**.

At **O**, there is a phase difference between the reflected light from **A** and the reflected light from **O**.
This phase difference is caused by:

- the path difference due to the air gap
- the reflection at **A**.

At **A** the phase of the light that is reflected is changed by $180°$.
At **O** there is no change to the phase of the light that is reflected or that is transmitted.

The thickness **OA** of the air gap is d.

Question 4 continues on the next page

Do not write outside the box

0 4 . 1 Deduce the relationship between d and the wavelength λ of light that produces a bright fringe.

[3 marks]

Light reflected at A travels an extra distance 2d (to A and back).

Reflection at A adds a phase change of 180°, equivalent to λ/2.

Bright fringe: constructive interference, so the two reflected waves are in phase at O.

2d + λ/2 = nλ, so 2d = (n + ½)λ, where n = 0, 1, 2, ...

Figure 16 shows a small part of the fringe pattern as viewed from above.

Figure 16

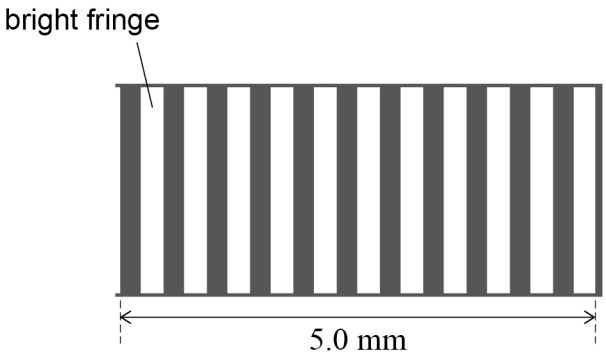

The distance between the centre of one bright fringe and the centre of the next bright fringe is s.

The thickness of the foil is t and the length of each glass plate up to the edge of the foil is l as shown in **Figure 17**.

Figure 17

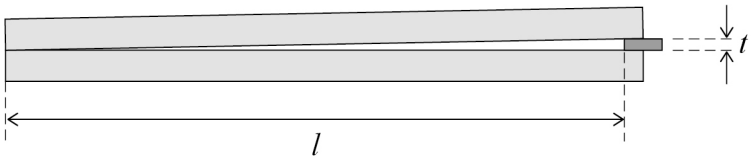

It can be shown that

$$\frac{t}{l} = \frac{\lambda}{2s}$$

Do not write outside the box

0 4 . 2 Determine t using **Figure 16**.

$\lambda = 590$ nm
$l = 6.0$ cm

[2 marks]

From Figure 16, 11 fringe spacings span 5.0 mm

$s = 5.0 / 11 = 0.455$ mm $= 4.55 \times 10^{-4}$ m

$t = \lambda l / 2s = (590 \times 10^{-9} \times 0.060) / (2 \times 4.55 \times 10^{-4})$

$= 3.9 \times 10^{-5}$ m

$t =$ 3.9×10^{-5} m

0 4 . 3 The space between the plates is now filled with water. The same light source is used, and t and l remain the same as before.

Deduce how the distance s will change when water fills the space between the plates.

refractive index of water = 1.3

[3 marks]

$\lambda_{water} = \lambda / n = 590 / 1.3 = 454$ nm

$s = \lambda l / 2t$, with t and l constant, so $s \propto \lambda$

In water the wave speed decreases ($c / 1.3 = 2.3 \times 10^8$ m s^{-1}) but the frequency stays the same, so the wavelength decreases (to 454 nm). From $t / l = \lambda / 2s$, $s = \lambda l / 2t$. As t and l are unchanged, $s \propto \lambda$, so s decreases by a factor of 1.3 (from 0.45 mm to about 0.35 mm).

8

END OF SECTION B

Do not write outside the box

Section C

Each of Questions **05** to **34** is followed by four responses, **A**, **B**, **C** and **D**.

For each question select the best response.

Only **one** answer per question is allowed.
For each question, completely fill in the circle alongside the appropriate answer.

CORRECT METHOD ⬬ WRONG METHODS

If you want to change your answer you must cross out your original answer as shown.

If you wish to return to an answer previously crossed out, ring the answer you now wish to select as shown.

You may do your working in the blank space around each question but this will not be marked.
Do **not** use additional sheets for this working.

0 5 A sequence of radioactive decays starts with nuclide **P** and ends with an isotope of **P**.

Which is a possible sequence for these decays?

[1 mark]

A one alpha decay followed by four β^- decays

B one alpha decay followed by two β^- decays

C two alpha decays followed by two β^- decays

D two alpha decays followed by one β^- decay

Do not write outside the box

0 6 The current in a circuit is $0.33\ \mathrm{A}$.

How many electrons pass a point in the circuit in 7.0 minutes?

[1 mark]

A 1.4×10^{19} ○

B 1.2×10^{20} ○

C 8.7×10^{20} ●

D 8.0×10^{21} ○

0 7 Monochromatic light of wavelength $520\ \mathrm{nm}$ is incident normally on a diffraction grating. The third-order maximum occurs at a diffraction angle θ.

Light of wavelength λ is incident normally on the same grating. The fourth-order maximum also occurs at angle θ.

What is λ?

[1 mark]

A $260\ \mathrm{nm}$ ○

B $390\ \mathrm{nm}$ ●

C $690\ \mathrm{nm}$ ○

D $780\ \mathrm{nm}$ ○

Turn over for the next question

Do not write outside the box

0 8 The alpha particle, positron and proton have different charge-to-mass ratios.

Which row shows the particles that have the greatest and the smallest value of this ratio?

[1 mark]

	Greatest charge-to-mass ratio	Smallest charge-to-mass ratio	
A	positron	alpha particle	●
B	positron	proton	○
C	alpha particle	proton	○
D	alpha particle	positron	○

Do not write outside the box

0 9 A circuit contains a battery with an emf of 12 V and negligible internal resistance.

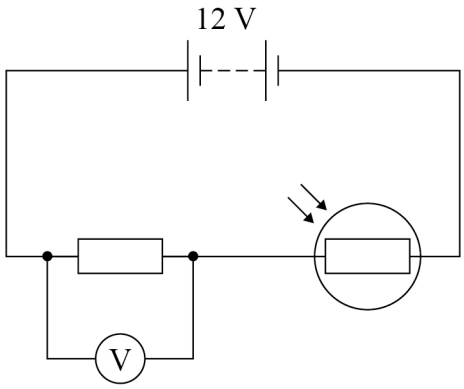

At a certain light intensity, the LDR has a resistance of 480 Ω and the voltmeter reading is 2.0 V.

At a different light intensity, the resistance of the LDR is R and the voltmeter reading is now 8.0 V.

What is R?

[1 mark]

A 48 Ω

B 96 Ω

C 120 Ω

D 160 Ω

Turn over for the next question

Do not write outside the box

1 0 A wire obeys Hooke's law.

When the wire is extended by ΔL, the elastic strain energy is E_s and the tension in the wire is T.

Which pair of graphs shows the variation of E_s with ΔL and the variation of E_s with T?

[1 mark]

A

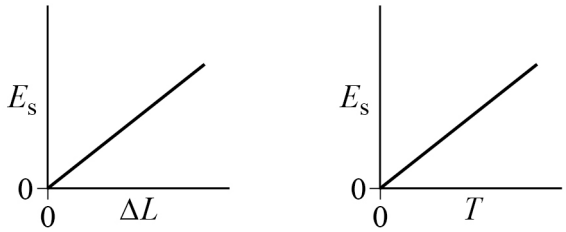

B

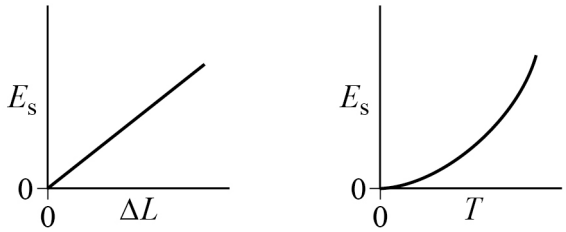

C

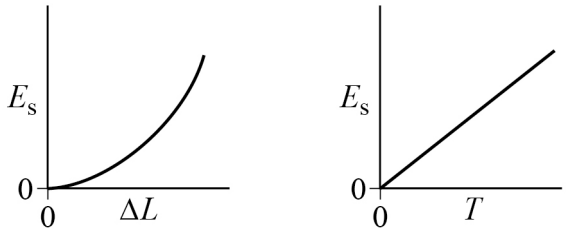

D

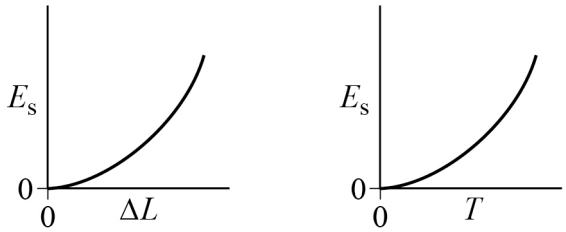

Do not write outside the box

1 1 The graph shows the variation with time of a quantity y for an object as it falls through the air.

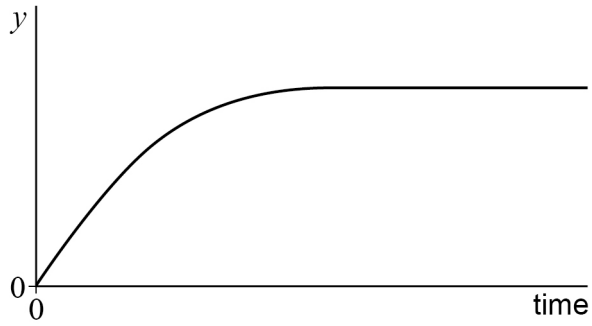

Which row gives y and the amount of air resistance?

[1 mark]

	y	Air resistance
A	distance	negligible
B	distance	not negligible
C	speed	negligible
D	speed	not negligible

1 2 An electric pump forces water continually through a horizontal pipe at a speed of $4.0\ \mathrm{m\ s^{-1}}$.

cross-sectional area of the pipe $= 5.0 \times 10^{-4}\ \mathrm{m^2}$
density of water $= 1.0 \times 10^{3}\ \mathrm{kg\ m^{-3}}$

What is the useful power of the pump?

[1 mark]

A 4.0 W

B 8.0 W

C 16 W

D 32 W

Turn over ►

Do not write outside the box

1 3 A current of 4.0 A in a resistor produces a power of 8.0 W.

What is the potential difference across this resistor when the power is 32 W?

[1 mark]

A 2.0 V ○

B 4.0 V ●

C 8.0 V ○

D 16 V ○

1 4 Monochromatic radiation from light source **P** is incident on a metal surface and photoelectrons are emitted.

When monochromatic radiation from light source **Q** is used, no photoelectrons are emitted.

Which property of the radiation from **P** must be greater than that from **Q**?

[1 mark]

A frequency ●

B intensity ○

C speed ○

D wavelength ○

Do not write outside the box

1 5 Sources $\mathbf{M_1}$ and $\mathbf{M_2}$ emit coherent microwaves of wavelength $5.0\ \text{cm}$.

When $\mathbf{M_1}$ and $\mathbf{M_2}$ are very close, a maximum of intensity occurs at a point **D** that is $1.0\ \text{m}$ away.

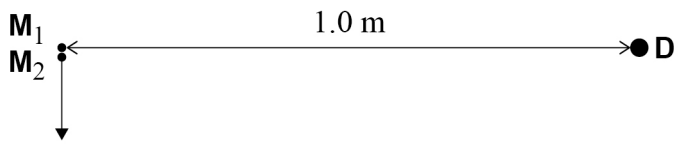

$\mathbf{M_2}$ is moved away from $\mathbf{M_1}$ along the line perpendicular to $\mathbf{M_1D}$.

The next maximum of intensity occurs at **D** when the distance between $\mathbf{M_1}$ and $\mathbf{M_2}$ is

[1 mark]

A $5.0\ \text{cm}$ ○

B $10\ \text{cm}$ ○

C $16\ \text{cm}$ ○

D $32\ \text{cm}$ ●

1 6 The quark structure of the antiparticle of the K^+ meson is

[1 mark]

A $u\bar{s}$ ○

B $\bar{u}d$ ○

C $\bar{u}s$ ●

D $\bar{d}s$ ○

Turn over for the next question

Do not write outside the box

1 7 What is the de Broglie wavelength of a positron travelling at 5% of the speed of light?

[1 mark]

A 2.7×10^{-16} m

B 2.7×10^{-14} m

C 4.9×10^{-13} m

D 4.9×10^{-11} m

1 8 A circuit contains a battery and three identical resistors R_X, R_Y and R_Z.

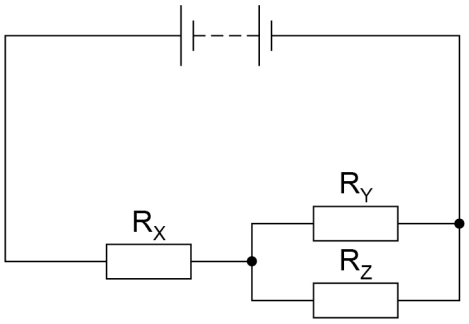

What is $\frac{\text{power in } R_X}{\text{power in } R_Y}$?

[1 mark]

A 0.25

B 0.5

C 2

D 4

Do not write outside the box

1 9 The graph shows the variation with time t of the acceleration of an object moving in a straight line.

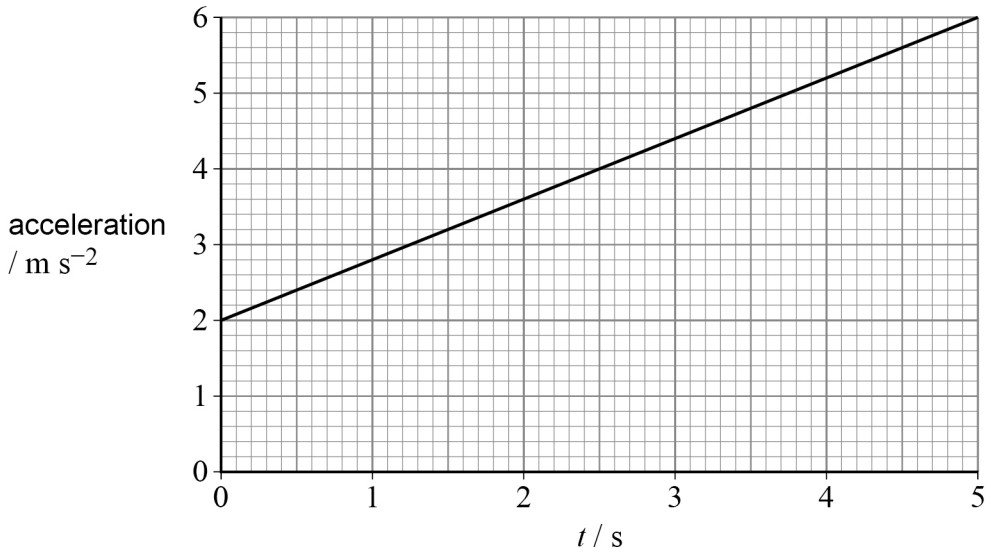

When $t = 0$ the speed of the object is $4.0\ \text{m s}^{-1}$.

What is the speed of the object when $t = 5.0$ s?

[1 mark]

A $10\ \text{m s}^{-1}$ ○

B $14\ \text{m s}^{-1}$ ○

C $20\ \text{m s}^{-1}$ ○

D $24\ \text{m s}^{-1}$ ●

2 0 An object is released and falls from rest.
Air resistance is negligible.

After falling for time t, the momentum of the object is

[1 mark]

A constant. ○

B proportional to $\sqrt{t}$. ○

C proportional to t. ●

D proportional to t^2. ○

Turn over ►

Do not write outside the box

2 1 The cladding of a step-index optical fibre

[1 mark]

A must not be transparent. ○

B must have a higher refractive index than the core. ○

C reduces signal loss. ●

D reduces material dispersion. ○

2 2 A cricket ball of mass $0.16\ \text{kg}$ travels at a speed of $35\ \text{m s}^{-1}$ towards a bat.
When the ball is hit, it is in contact with the bat for $52\ \text{ms}$.
As a result, the ball travels in the opposite direction with a speed of $30\ \text{m s}^{-1}$.

What is the average force on the ball from the bat?

[1 mark]

A $0.015\ \text{N}$ ○

B $0.20\ \text{N}$ ○

C $15\ \text{N}$ ○

D $200\ \text{N}$ ●

2 3 A horse starts walking from point **X** on a circular track of circumference $60\ \text{m}$.

The speed of the horse is a constant $2.0\ \text{m s}^{-1}$.

What is the horse's displacement from **X** after $45\ \text{s}$?

[1 mark]

A $19\ \text{m}$ ●

B $30\ \text{m}$ ○

C $38\ \text{m}$ ○

D $90\ \text{m}$ ○

Do not write outside the box

2 4 Which statement is true?

[1 mark]

A A brittle fracture occurs after little or no elastic deformation. ○

B A brittle fracture occurs after little or no plastic deformation. ●

C In a plastic deformation, energy stored is proportional to stress. ○

D In a plastic deformation, stress is proportional to strain. ○

2 5 A mass is held stationary by two cables **X** and **Y**.

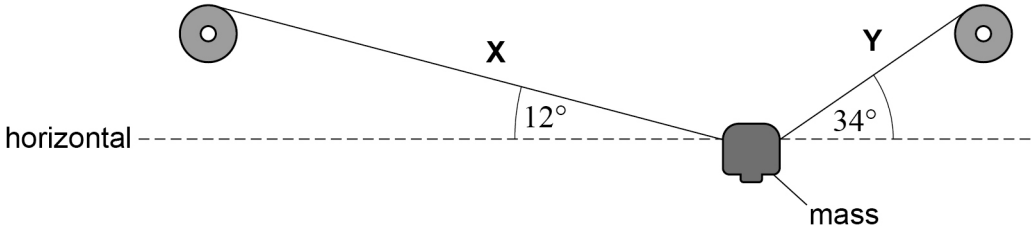

The tension in **X** is 390 N.

What is the tension in **Y**?

[1 mark]

A 145 N ○

B 380 N ○

C 390 N ○

D 460 N ●

Turn over for the next question

Do not write outside the box

2 6 A resistance wire **XY** of length 25 cm has constant cross-section.
The wire is connected to a battery of emf 6.0 V and negligible internal resistance.

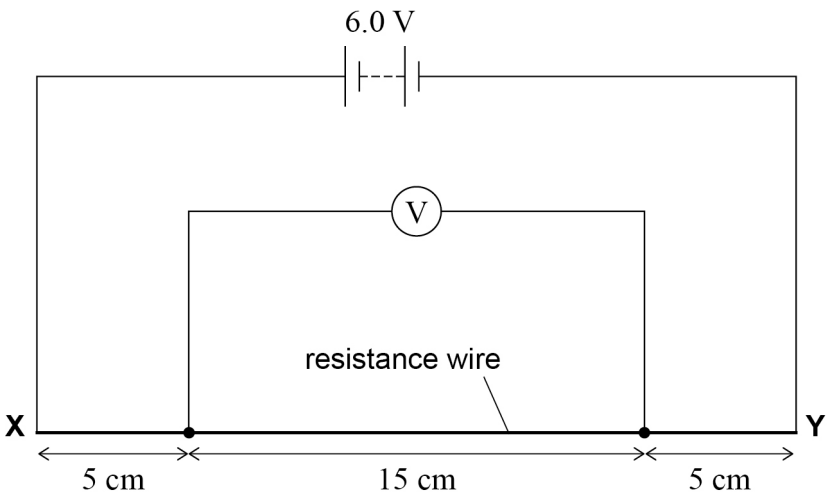

What is the reading on the voltmeter?

[1 mark]

A 1.8 V ○

B 2.4 V ○

C 3.6 V ●

D 4.5 V ○

2 7 The electric motor of a lift raises a load of 750 N at a constant speed. The load moves through a vertical distance of 3.0 m in 1.5 s. As the load is being raised, the current in the motor is 12 A and the potential difference across the motor is 200 V.

What is the efficiency of the lift?

[1 mark]

A 16% ○

B 63% ●

C 88% ○

D 94% ○

Do not write outside the box

2 8 An aluminium wire has a length of $12\ \text{cm}$ and a volume of $3.7 \times 10^{-4}\ \text{m}^3$. The resistivity of aluminium is $2.7 \times 10^{-8}\ \Omega\ \text{m}$.

What is the resistance of the wire?

[1 mark]

A $1.1 \times 10^{-6}\ \Omega$ ●

B $8.8 \times 10^{-6}\ \Omega$ ○

C $1.1 \times 10^{-2}\ \Omega$ ○

D $8.8 \times 10^{-2}\ \Omega$ ○

2 9 Glider **X** of mass $400\ \text{g}$ travels at $1.8\ \text{m s}^{-1}$ to the right on a horizontal, frictionless track.

Glider **Y** of mass $300\ \text{g}$ travels towards **X** at $0.7\ \text{m s}^{-1}$.

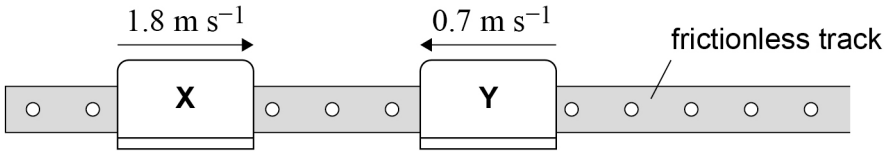

X and **Y** collide.
Immediately after the collision, **Y** travels to the right at a speed of $0.9\ \text{m s}^{-1}$.

What are the speed and direction of movement of **X** immediately after the collision?

[1 mark]

A $0.6\ \text{m s}^{-1}$ to the left ○

B $0.6\ \text{m s}^{-1}$ to the right ●

C $1.7\ \text{m s}^{-1}$ to the left ○

D $1.7\ \text{m s}^{-1}$ to the right ○

Turn over for the next question

Do not write outside the box

3 0 A stationary wave is formed due to superposition between a progressive wave and its reflection.
Both the progressive wave and its reflection are polarised.

Which statement about the progressive wave and its reflection is true at an antinode?

[1 mark]

A They must be longitudinal waves. ○

B They must be coherent. ○

C They must have different frequencies. ○

D They must be polarised in the same plane. ●

3 1 Three non-parallel coplanar forces act on a body.

Which is **not** required for the forces to be in equilibrium?

[1 mark]

A The sum of the forces in any direction must be zero. ○

B The sum of the moments of the forces about any point in the plane must be zero. ○

C The lines of action of the forces must pass through the centre of mass of the body. ●

D The resultant of any two forces must be the same magnitude as the third force. ○

3 2 Which row is correct for both a progressive wave and a stationary wave?

[1 mark]

	Progressive wave	**Stationary wave**	
A	Some of the particles do not vibrate.	All the particles vibrate in phase with each other.	○
B	None of the particles vibrate with the same amplitude.	All the particles vibrate with the same amplitude.	○
C	All the particles vibrate.	Some of the particles do not vibrate.	●
D	All the particles vibrate in phase with each other.	None of the particles vibrate in phase with each other.	○

Do not write outside the box

3 3 A student investigates the characteristics of a power supply.

The experimental data are plotted on a graph with:
- pd (potential difference) across the power supply plotted on the y-axis
- current in the power supply plotted on the x-axis.

The axes intersect at $(0,0)$.

What feature of the graph represents the emf of the power supply?

[1 mark]

A the area enclosed by the line and the x-axis ○

B the magnitude of the gradient of the line ○

C the intercept on the x-axis ○

D the intercept on the y-axis ●

3 4 Which row shows SI prefixes in order of increasing magnitude?

[1 mark]

	Smallest			Largest	
A	f	p	μ	c	●
B	f	p	c	μ	○
C	p	f	μ	c	○
D	p	f	c	μ	○

30

END OF QUESTIONS

Do not write outside the box

There are no questions printed on this page

DO NOT WRITE ON THIS PAGE
ANSWER IN THE SPACES PROVIDED

Do not write outside the box

Question number	**Additional page, if required.** **Write the question numbers in the left-hand margin.**

Do not write outside the box

Question number	**Additional page, if required.** **Write the question numbers in the left-hand margin.**

Copyright information

For confidentiality purposes, all acknowledgements of third-party copyright material are published in a separate booklet. This booklet is published after each live examination series and is available for free download from www.aqa.org.uk

Permission to reproduce all copyright material has been applied for. In some cases, efforts to contact copyright-holders may have been unsuccessful and AQA will be happy to rectify any omissions of acknowledgements. If you have any queries please contact the Copyright Team.

Copyright © 2024 AQA and its licensors. All rights reserved.