AQA

Please write clearly in block capitals.

Centre number | | | | | | Candidate number | | | | |

Surname StemUp Model Solution

Forename(s)

Candidate signature

I declare this is my own work.

AS
PHYSICS

Paper 2

Wednesday 24 May 2023 Afternoon

Time allowed: 1 hour 30 minutes
You are advised to spend about 35 minutes on Section C

Materials

For this paper you must have:
- a pencil and a ruler
- a scientific calculator
- a Data and Formulae Booklet
- a protractor.

Instructions
- Use black ink or black ball-point pen.
- Fill in the boxes at the top of this page.
- Answer **all** questions.
- You must answer the questions in the spaces provided. Do not write outside the box around each page or on blank pages.
- If you need extra space for your answer(s), use the lined pages at the end of this book. Write the question number against your answer(s).
- Do all rough work in this book. Cross through any work you do not want to be marked.
- Show all your working.

Information
- The marks for questions are shown in brackets.
- The maximum mark for this paper is 70.
- You are expected to use a scientific calculator where appropriate.
- A Data and Formulae Booklet is provided as a loose insert.

For Examiner's Use	
Question	Mark
1	
2	
3	
4	
5–34	
TOTAL	

Do not write outside the box

Section A

Answer **all** questions in this section.

0 1 . 1 **Figure 1** shows a micrometer screw gauge.

Figure 1

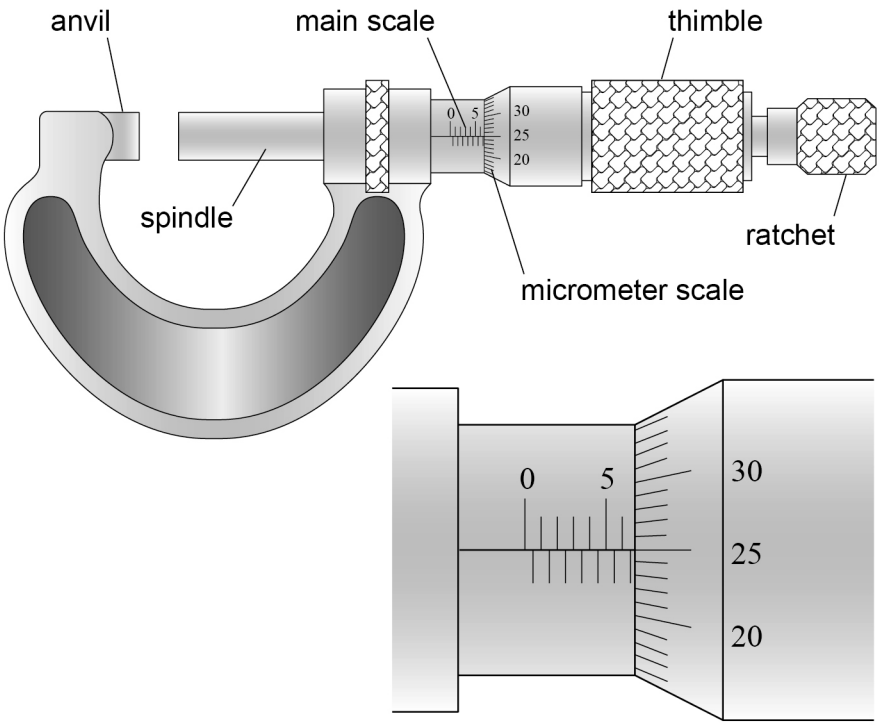

What is the reading on the micrometer?

Tick (✓) **one** box.

[1 mark]

6.25 ☐

6.75 ☐ ✓

7.25 ☐

8.25 ☐

Do not write outside the box

0 1 . 2 A metal wire of diameter d is held in the gap between the anvil and the spindle. Just before the reading of d is taken, the gap is closed using the ratchet and not the thimble.

Explain why the gap is closed in this way.

[1 mark]

The ratchet slips at a small fixed force, so the wire is not squashed.

The thimble could distort the wire and reduce its diameter (or damage the screw thread), so d would read smaller than its true value.

0 1 . 3 The mass per unit length μ of the metal wire is given by

$$\mu = \frac{\pi \rho d^2}{4}$$

where ρ is the density of the metal.

Values of d and μ are used to calculate ρ.

The percentage uncertainty in d is 1.2%.
The percentage uncertainty in μ is 2.0%.

Calculate the percentage uncertainty in the result for ρ.

[2 marks]

$\rho = 4\mu / \pi d^2$

% uncertainty in ρ = % in μ + 2 × % in d

= 2.0 + (2 × 1.2)

= 2.0 + 2.4 = 4.4 %

percentage uncertainty = 4.4 %

Question 1 continues on the next page

Turn over ►

Do not write outside the box

Figure 2 shows apparatus used to investigate how the frequency of stationary waves on a wire depends on its diameter d.

Figure 2

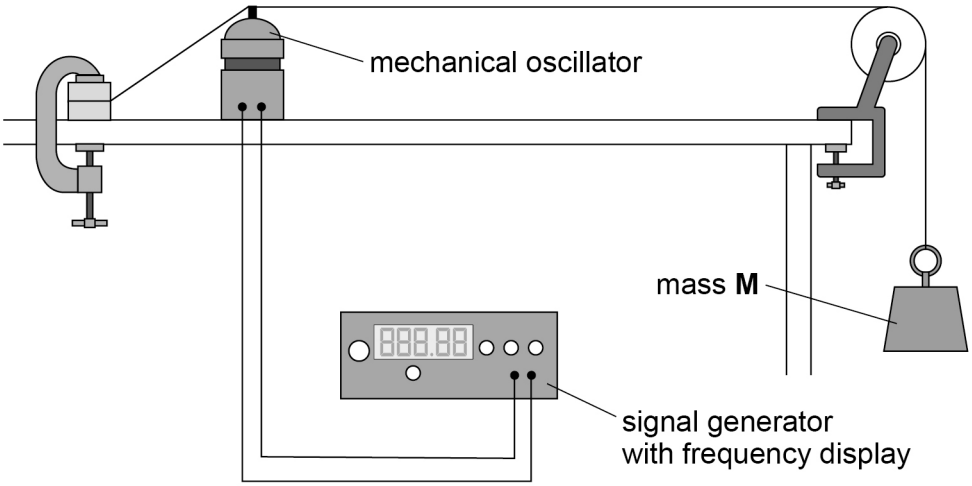

When the signal generator is switched on, the horizontal part of the wire oscillates.

A student changes the frequency until the first-harmonic stationary wave is produced. The student records the frequency f of the first harmonic and then turns off the signal generator.
She removes the wire and measures d using a micrometer.

She then repeats the experiment for wires of different diameter.

0 1 . 4 The wires used in the experiment are made of the same metal so that ρ is a control variable.

State **two** other control variables in the experiment.

[2 marks]

1 Length of the horizontal (oscillating) wire between the oscillator and the pulley.

2 The mass of M (so the tension in the wire stays the same).

Do not write outside the box

Figure 3 is a plot of the experimental data.

Figure 3

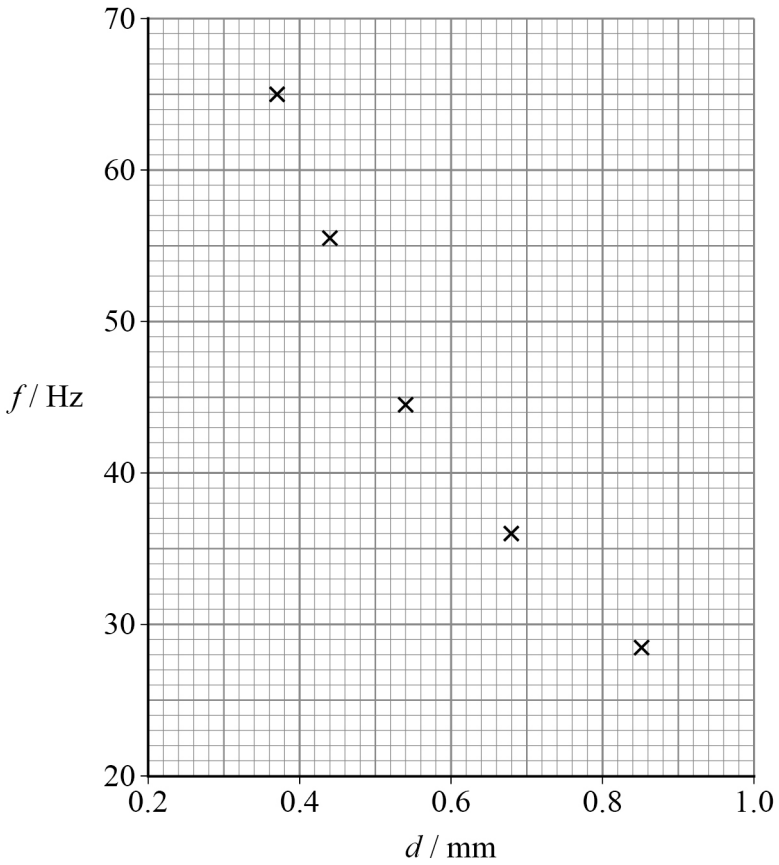

0 1 . 5 The student suggests that $f \propto \frac{1}{d}$.

Deduce, using data points from **Figure 3**, whether this suggestion is correct.

[2 marks]

d × f for each point (d in mm, f in Hz):

0.37 × 65.0 = 24.1

0.44 × 55.5 = 24.4

0.54 × 44.5 = 24.0

0.68 × 36.0 = 24.5

0.85 × 28.5 = 24.2

d × f is constant (about 24 mm Hz) for all the points, within experimental uncertainty, so f is inversely proportional to d. The suggestion is correct.

Question 1 continues on the next page

Do not write outside the box

0 1 . 6 Another student repeats the experiment with the mass of **M** doubled.

Explain how this student's plotted data compare with **Figure 3**.

[2 marks]

All the plotted points move up: for the same d, each value of f is √2 times (about 1.4 times) larger than in Figure 3.

This is because doubling M doubles the tension T in the wire. $f = (1/2L)\sqrt{(T/\mu)}$, so $f \propto \sqrt{T}$, while d and μ are unchanged.

10

Do not write outside the box

0 2 **Figure 4** shows an arrangement used to investigate projectile motion of a ball.

Figure 4

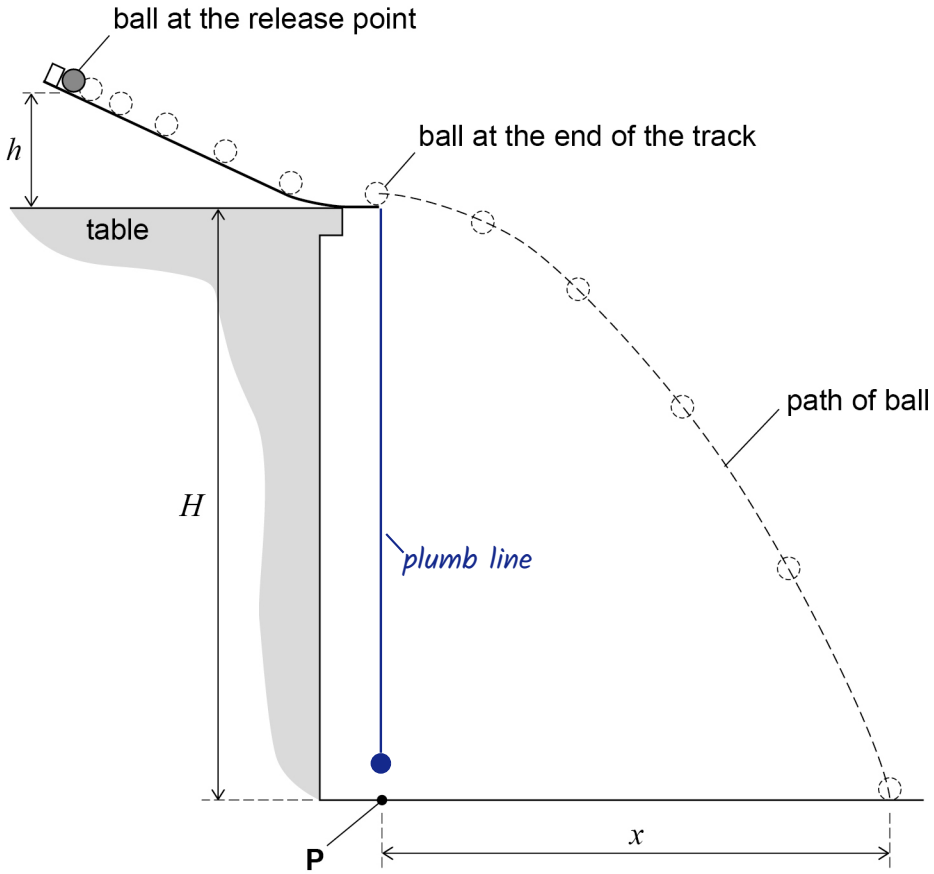

The ball is placed on the track at the release point.
The ball is released from rest from a vertical distance h above the table.

When the ball reaches the end of the track, it is a vertical distance H above the horizontal floor.
The ball leaves the track horizontally and lands on the floor at a horizontal distance x from the end of the track.

0 2 . 1 To measure x a student must locate a point **P** on the floor vertically below the end of the track.

Describe a procedure to locate **P**.
You may add detail to **Figure 4** to illustrate your answer.

[1 mark]

Hang a plumb line (a mass on a string) from the end of the track so that the string touches the projecting end of the track. When the bob is still and just above the floor, mark the point on the floor directly below it: this is P.

Turn over ►

Do not write outside the box

0 2 . 2 A ruler, graduated in mm, is used to determine x.
The student places the ruler on the floor with the zero graduation aligned with **P**.

The student determines x when the ball is released six times at a particular value of h.
He makes marks on the floor where the ball lands.

Figure 5 shows circles that indicate these marks.

Figure 5

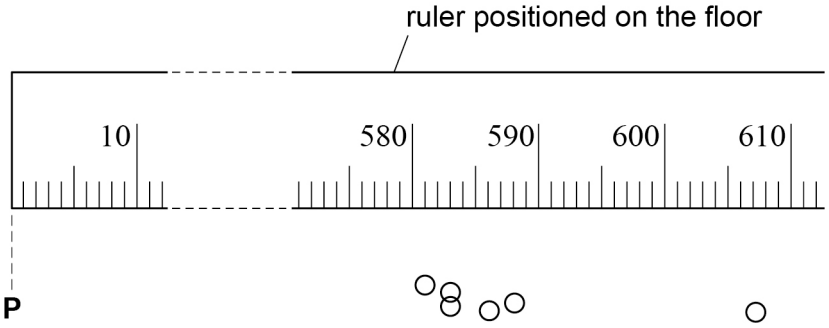

Determine x for this value of h.

[3 marks]

Readings: 581, 583, 583, 586, 588, 607 mm

607 mm is anomalous, so it is rejected.

mean = (581 + 583 + 583 + 586 + 588) / 5

= 2921 / 5 = 584.2 mm

x = 584 mm

Do not write outside the box

0 2 . 3 The student obtains values of x corresponding to other values of h. **Figure 6** shows his results.

Figure 6

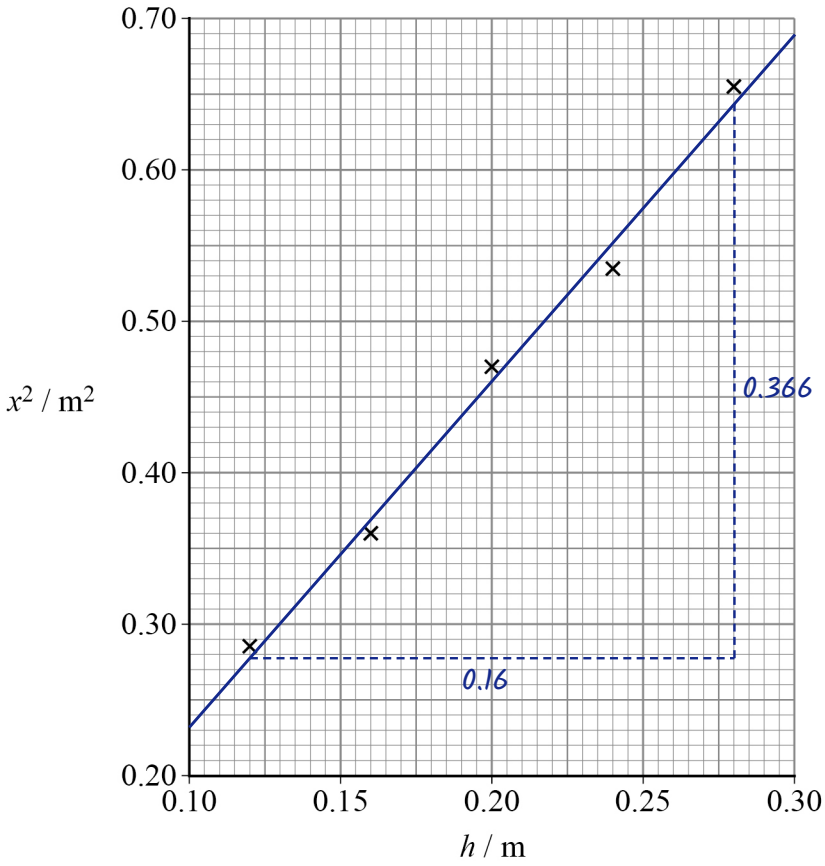

It can be shown that $\frac{x^2}{H} = \frac{20}{7}h$

Determine H.

[3 marks]

gradient = (0.644 − 0.278) / (0.28 − 0.12) = 0.366 / 0.16 = 2.29 m

x^2 = (20H/7) h, so gradient = 20H / 7

H = 7 × gradient / 20 = 7 × 2.29 / 20

= 0.80 m

H = 0.80 m

Question 2 continues on the next page

Do not write outside the box

In a different arrangement, the ball is released from rest and then continues to roll at a constant velocity across a horizontal table, as shown in **Figure 7**.

Figure 7

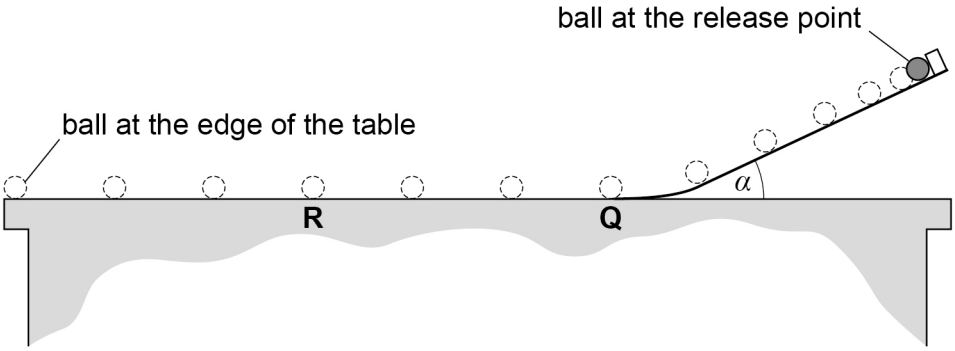

The bottom of the track is fixed to the table at point **Q**.
The angle between the straight part of the track and the table is α.
A marker is placed at **R**, a point midway between **Q** and the edge of the table.

The student uses a stopwatch to measure the time t for the ball to roll from **Q** to **R**.

0 2 . 4 Explain why increasing the distance **QR** will reduce the percentage uncertainty in t.

[1 mark]

The absolute uncertainty in t (from reaction time starting and stopping the stopwatch) stays the same, but t is larger, so the percentage uncertainty (absolute uncertainty / t × 100) is smaller.

Do not write outside the box

0 2 . 5 **Figure 8** shows values of t for different values of α.

Figure 8

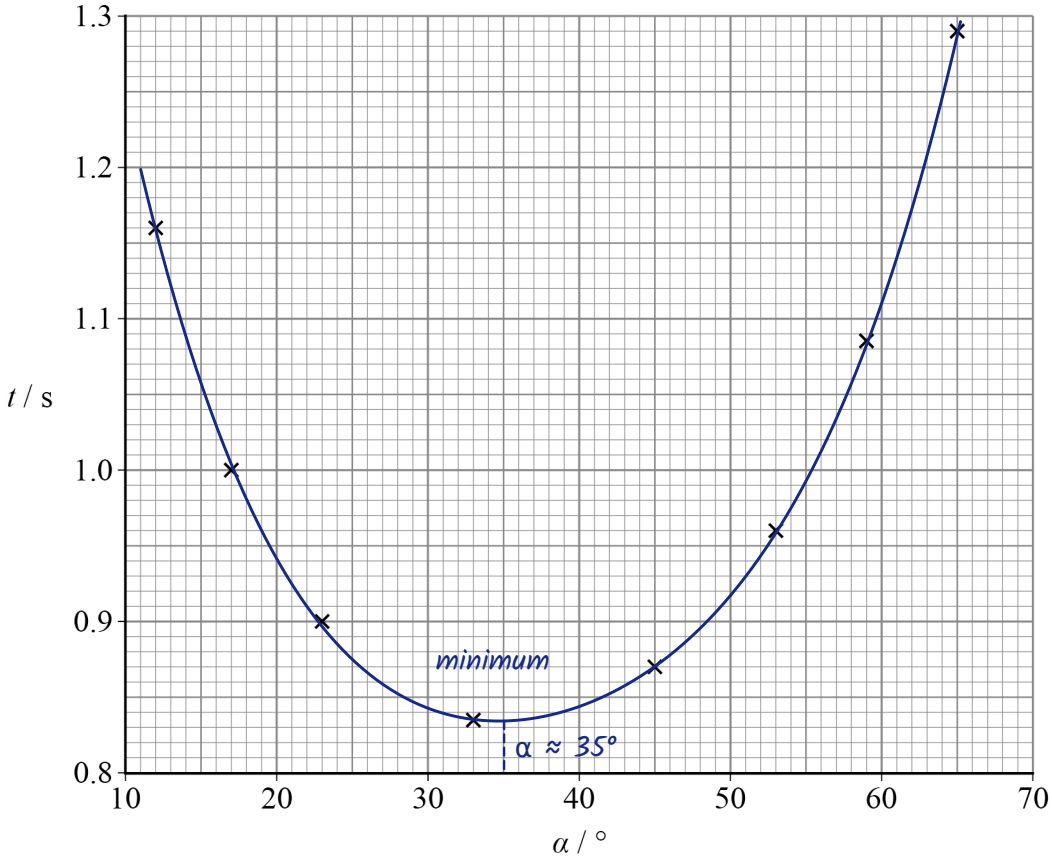

At a particular value of α the ball rolls from **Q** to **R** at its maximum velocity.

Explain how the student should use **Figure 8** to determine this value of α.
Go on to suggest what further readings should be taken to reduce the uncertainty in this value of α.

[2 marks]

Draw a smooth best-fit curve through the points and read off the value of α at the minimum of the curve (where t is smallest, so the gradient is zero), about 35°.

Then take more readings of t at values of α close to this minimum, e.g. every 1° to 2° between about 28° and 42°, so the minimum can be located more precisely.

10

END OF SECTION A

Do not write outside the box

Section B

Answer **all** questions in this section.

0 3 **Figure 9** shows a spoon used to measure the mass of food.

The empty spoon balances when a pivot is placed under a point **P** halfway along the spoon.

Figure 9

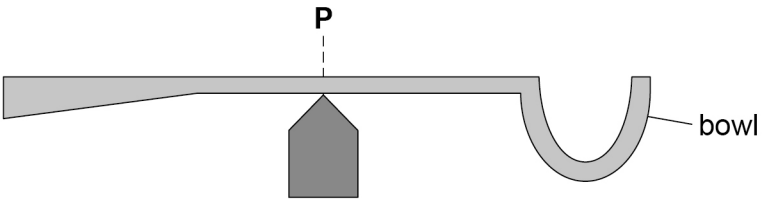

The spoon tilts when food of mass M is placed in the bowl. The spoon is rebalanced by moving the pivot a distance x to the right of **P**. The new position of the pivot is under point **Q** in **Figure 10**.

Figure 10

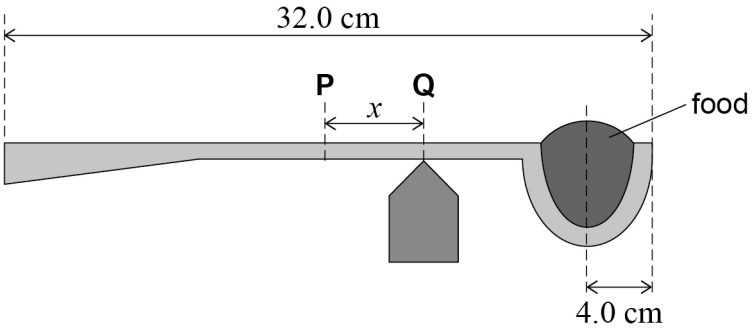

The total length of the spoon is $32.0\ \text{cm}$. The weight of the food acts through a line at a distance of $4.0\ \text{cm}$ from the right-hand edge of the spoon.

0 3 . 1 Explain why the spoon in **Figure 10** is balanced when the pivot is at **Q**.

[2 marks]

Moments about Q balance: anticlockwise moment of the spoon's weight about Q = clockwise moment of the food's weight about Q.

The overall centre of mass is now above Q, so the total weight acts through Q.

Do not write outside the box

0 3 . 2 The empty spoon has mass m.

Show that, for the arrangement in **Figure 10**,

$$\frac{m}{M} = \frac{(12.0 - x)}{x}$$

[2 marks]

About Q: food's weight is 32.0 − 4.0 − 16.0 − x = 12.0 − x from Q

mg × x = Mg × (12.0 − x)

so m / M = (12.0 − x) / x

0 3 . 3 **Figure 11** shows how x varies with M.

Figure 11

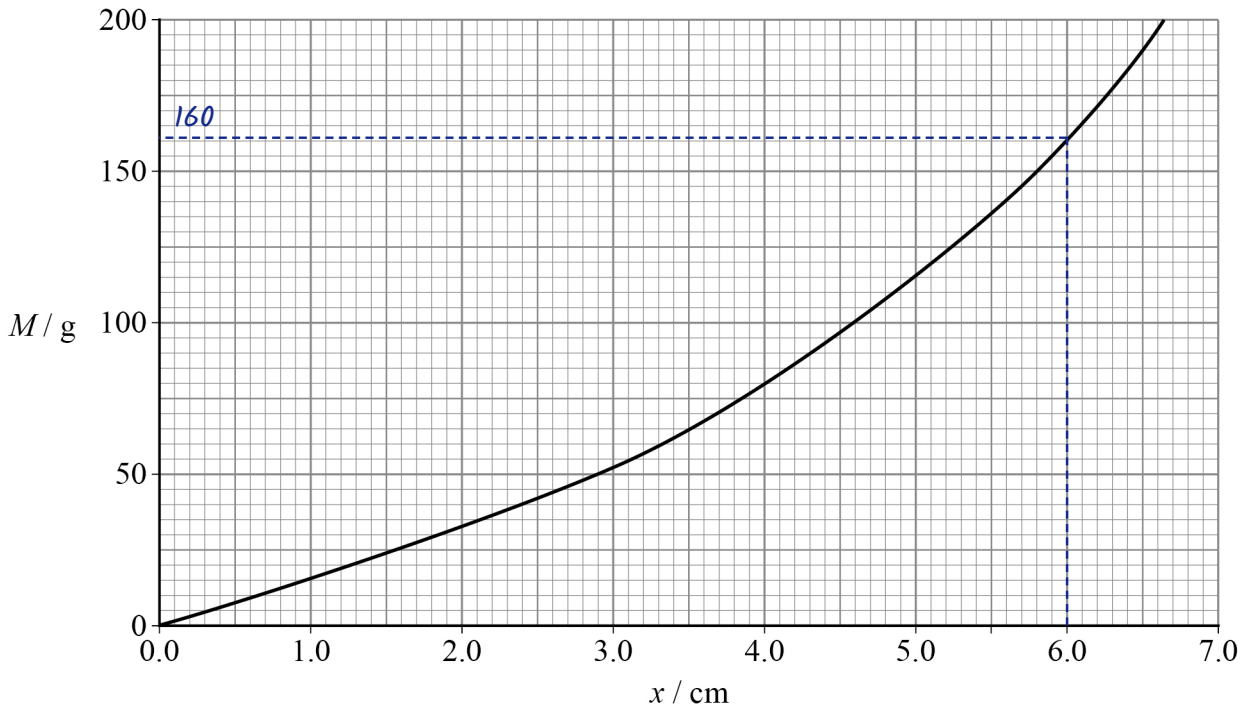

Determine, using **Figure 11**, the weight of the empty spoon.

[3 marks]

When m = M, (12.0 − x)/x = 1, so x = 6.0 cm; read off M = 160 g

so m = 160 g = 0.160 kg

weight = mg = 0.160 × 9.81 = 1.57 N

weight = 1.57 N

Turn over ►

Do not write outside the box

0 3 . 4 A scale, in grams, is marked on the spoon between **P** and the bowl. **Figure 11** is used to calibrate this scale in intervals of $25\ \mathrm{g}$.

M can be measured by balancing the spoon. The value is read from the point of the scale directly above the pivot.

State and explain how the uncertainty in the value read from the scale changes as M increases.

[3 marks]

The (absolute) uncertainty in M increases as M increases.

The gradient of Figure 11 increases with M, so the 25 g scale marks are unequal and get closer together at larger M: 0 to 25 g is about 1.5 cm, 175 g to 200 g only about 0.4 cm.

So the same uncertainty in x gives a larger range of M at high M.

10

Do not write outside the box

0 4 **Figure 12** shows a type of refractometer.
A semi-circular glass block is arranged so that its semi-circular faces are vertical.
A drop of liquid is placed at the centre of the flat horizontal surface of the block.

Figure 12

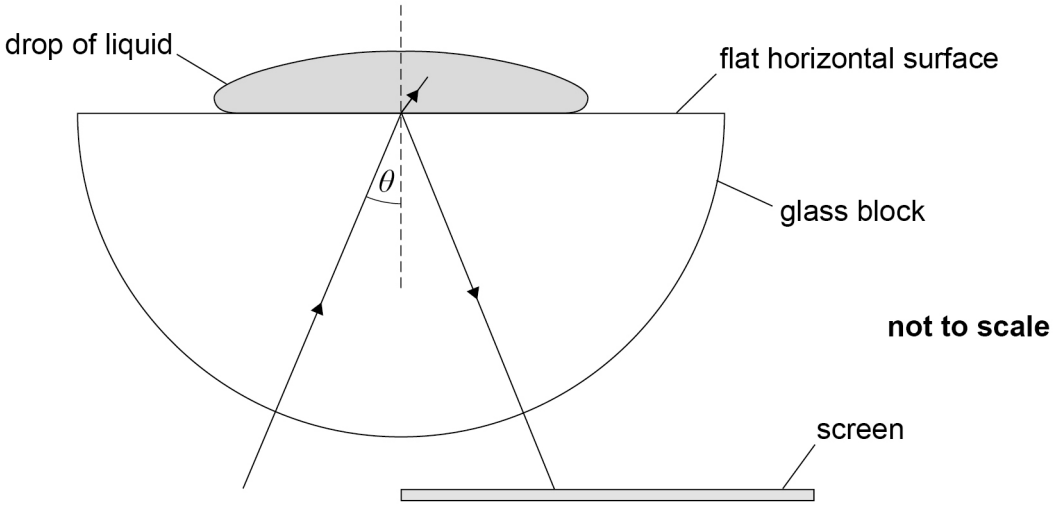

Light enters the block through the curved surface and is incident on the midpoint of the horizontal surface at angle of incidence θ.
Light that reflects at the glass–liquid boundary is detected on a screen that lies parallel to the horizontal surface.

0 4 . 1 Explain why the light ray in **Figure 12** does not change direction as it enters the block.
[1 mark]

The ray travels along a radius, so it meets the curved surface along the normal (angle of incidence 0°) and is not refracted.

0 4 . 2 The refractometer is calibrated using a drop of liquid.
When $\theta = 15°$, light is partially refracted at the glass–liquid boundary.

Calculate the angle of refraction at this boundary.

refractive index of glass block = 1.84
refractive index of liquid = 1.33

[2 marks]

$n_1 \sin \theta_1 = n_2 \sin \theta_2$

$1.84 \times \sin 15° = 1.33 \times \sin \theta$

$\sin \theta = 0.4762 / 1.33 = 0.3581, \quad \theta = 20.98°$

angle of refraction = 21 °

Turn over ►

Do not write outside the box

The refractometer is used to determine the critical angle θ_c at the glass–liquid boundary.

Figure 13 shows dimensions of the arrangement.

Figure 13

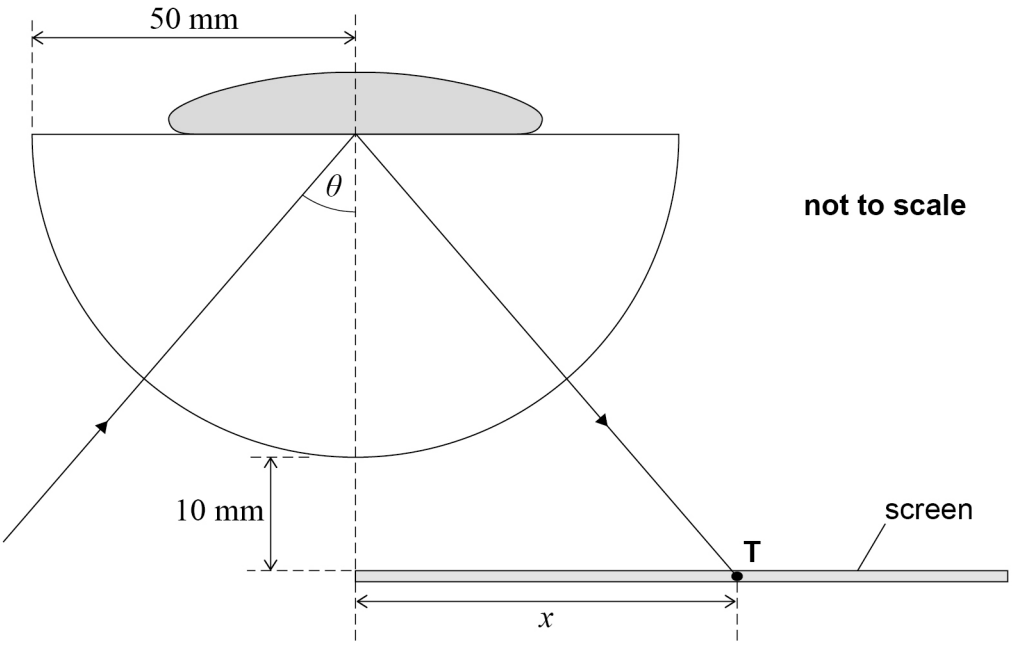

The intensity of the light ray on the screen is observed as θ is increased from $15°$. When $\theta = \theta_c$ the intensity of the light ray is seen to increase sharply at a point **T** on the screen.

The distance between the left-hand edge of the screen and **T** is x.

0 4 . 3 Explain why the intensity of the light ray on the screen increases at **T**.

[2 marks]

At T, $\theta = \theta_c$, so total internal reflection occurs: all the light is reflected to the screen, none refracts into the liquid.

Left of T there is only partial reflection (some light refracts), so the ray is less intense.

Do not write outside the box

0 4 . 4 The liquid is replaced with a drop of sugar solution.
The refractive index of the sugar solution is greater than 1.33

Deduce how this change affects the position at which the sharp increase in intensity is observed on the screen.

[2 marks]

$\sin \theta_c = n_{liquid} / n_{glass}$. A larger n_{liquid} makes this ratio closer to 1, so the critical angle increases.

So the ray hits the screen further from the centre: T moves to the right (x increases).

Question 4 continues on the next page

Do not write outside the box

0 4 . 5 The refractometer in **Figure 13** is used to determine the concentration of a sugar solution.

Figure 14 shows the variation of refractive index with concentration of sugar solution.

Figure 14

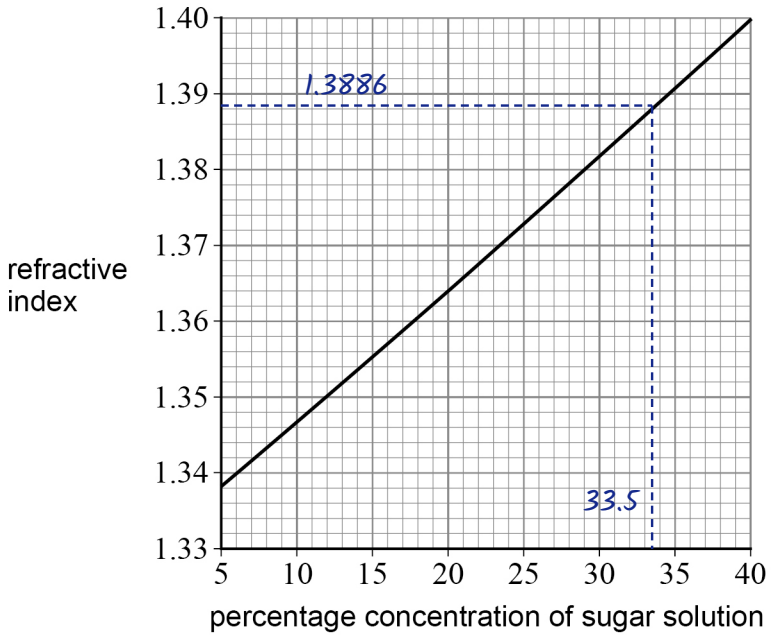

For a drop of a particular sugar solution, $x = 69$ mm.

Determine the percentage concentration of the sugar solution.

refractive index of glass block = 1.84

[3 marks]

$\tan \theta_c = 69 / (50 + 10) = 69 / 60, \quad \theta_c = 48.99°$

$\sin \theta_c = n / 1.84$

$n = 1.84 \times \sin 48.99° = 1.3886$

From Figure 14, n = 1.3886 gives a concentration of 33.5 %

percentage concentration = 33.5 %

10

END OF SECTION B

Do not write outside the box

Section C

Each of Questions **05** to **34** is followed by four responses, **A**, **B**, **C** and **D**.

For each question select the best response.

Only **one** answer per question is allowed.
For each question, completely fill in the circle alongside the appropriate answer.

CORRECT METHOD ⬬ WRONG METHODS

If you want to change your answer you must cross out your original answer as shown.

If you wish to return to an answer previously crossed out, ring the answer you now wish to select as shown.

You may do your working in the blank space around each question but this will not be marked. Do **not** use additional sheets for this working.

0 5 Light of wavelength λ is incident normally on a diffraction grating.
The separation between adjacent slits is equal to 5λ.

What is the smallest angle between the third-order maximum and fourth-order maximum diffracted beams?

[1 mark]

A 13.3°

B 16.2°

C 36.9°

D 53.1°

Turn over for the next question

Do not write outside the box

0 6 $\mathbf{S_1}$ and $\mathbf{S_2}$ are coherent sources of microwaves that produce waves of the same amplitude. A microwave detector gives a zero reading when placed at a point that is the same distance from $\mathbf{S_1}$ and $\mathbf{S_2}$.

What is the phase difference between microwaves from $\mathbf{S_1}$ and $\mathbf{S_2}$ at the detector?

[1 mark]

A zero ○

B 1.6 rad ○

C 3.1 rad ●

D 6.3 rad ○

0 7 Powder is spread along the inside of an air-filled pipe that is closed at one end.
A loudspeaker is placed at the other end.
At certain sound frequencies a stationary wave is produced so that powder collects in evenly spaced piles. These piles correspond to positions of minimum amplitude.

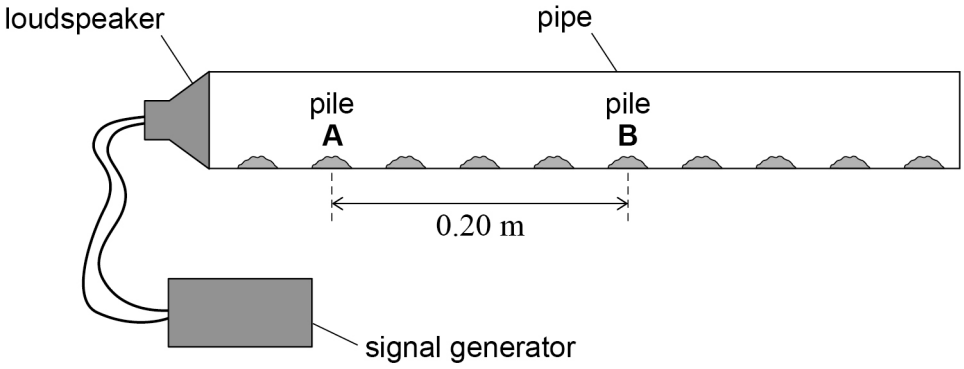

The distance between pile **A** and pile **B** is 0.20 m.

What is the wavelength of the stationary sound wave?

[1 mark]

A 0.04 m ○

B 0.05 m ○

C 0.10 m ●

D 0.20 m ○

Do not write outside the box

0 8 An object of mass $0.20\ \text{kg}$ moves with an initial velocity u. It collides with a stationary object of mass $0.30\ \text{kg}$.

The objects stick together when they collide.
No external forces act on the objects.

What is the final velocity of the two objects after the collision?

[1 mark]

A $0.40u$ ●

B $0.67u$ ○

C $1.5u$ ○

D $2.5u$ ○

0 9 **P** and **Q** represent displacements.

What is the resultant displacement when **P** and **Q** are added?

[1 mark]

A ○

B ○

C ○

D ●

Do not write outside the box

1 0 A girl kicks a football vertically upwards at time $t = 0$

Air resistance is negligible.

What is the variation of the vertical component of velocity v of the football with t until it reaches the ground?

[1 mark]

A

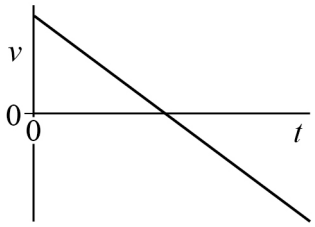

B

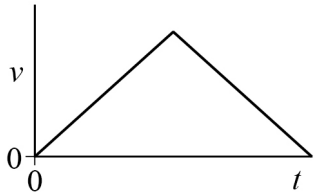

C

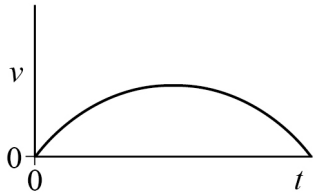

D

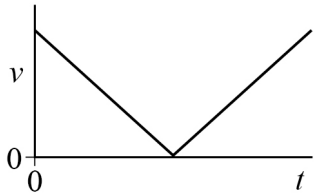

Do not write outside the box

1 1 A cell with negligible internal resistance is connected to two resistors of resistance $4R$ and R.
The currents I_1, I_2 and I_3 in the circuit are shown.

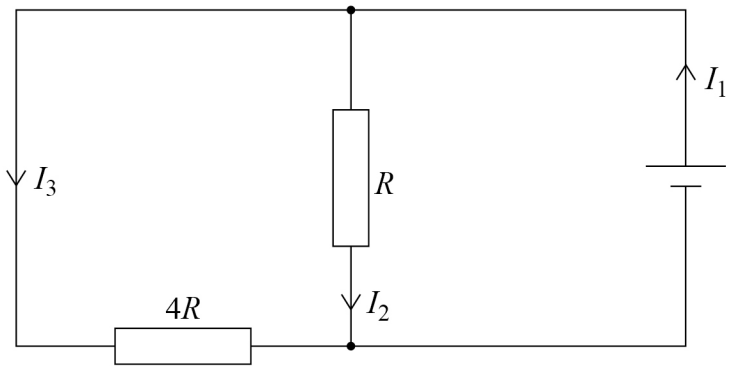

Which equation is correct for this circuit?

[1 mark]

A $I_1 = 4I_2$ ○

B $I_1 = 4I_3$ ○

C $I_2 = 4I_3$ ●

D $I_3 = 4I_1$ ○

Turn over for the next question

Do not write outside the box

1 2 The four lowest energy levels of an atom are shown.

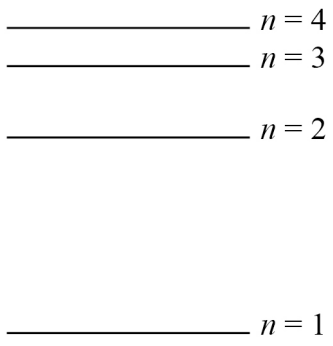

A gas contains atoms in the $n = 4$ level.
The atoms de-excite to the $n = 1$ level.

How many photon frequencies are observed?

[1 mark]

A 3 ○

B 4 ○

C 5 ○

D 6 ●

Do not write outside the box

1 3 Monochromatic light of frequency f is incident on a metal surface in a vacuum. Photoelectrons are emitted from the surface.

The photoelectric current I is measured.

The magnitude of the stopping potential V_s is then measured.

f is increased without changing the rate at which photons arrive at the metal surface.

What are the new measurements of the photoelectric current and the magnitude of the stopping potential?

[1 mark]

	Photoelectric current	Magnitude of the stopping potential	
A	I	V_s	○
B	I	$> V_s$	●
C	$> I$	V_s	○
D	$> I$	$> V_s$	○

1 4 An electron and a positron annihilate each other.

Which quantity is **not** conserved in the annihilation?

[1 mark]

A electric charge ○

B kinetic energy ●

C lepton number ○

D momentum ○

Turn over ►

Do not write outside the box

1 5 Which exchange particle transfers charge during electron capture?

[1 mark]

A meson ○

B pion ○

C virtual photon ○

D W boson ●

1 6 A free neutron decays to produce a proton and

[1 mark]

A an electron and an antineutrino. ●

B an electron and a neutrino. ○

C a positron and an antineutrino. ○

D a positron and a neutrino. ○

1 7 Two aerials $\mathbf{A_1}$ and $\mathbf{A_2}$ receive radio waves from the same distant transmitter **T**.
The waves have a frequency of 88 MHz.
The phase difference between the waves received by $\mathbf{A_1}$ and $\mathbf{A_2}$ is 6.6 rad.

What is the distance $\mathbf{A_1T} - \mathbf{A_2T}$?

[1 mark]

A 1.6 m ○

B 3.2 m ○

C 3.6 m ●

D 7.2 m ○

Do not write outside the box

1 8 A circuit contains a thermistor and a resistor in parallel. The internal resistance of the cell is negligible.

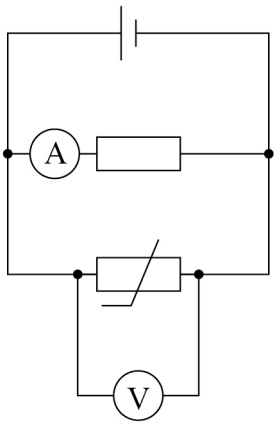

The temperature of the thermistor is increased.
The temperature of the resistor is kept constant.

What is observed on the voltmeter and the ammeter?

[1 mark]

	Voltmeter reading	Ammeter reading	
A	decreases	increases	○
B	increases	increases	○
C	no change	increases	○
D	no change	no change	●

Turn over ►

Do not write outside the box

1 9 The table shows the lengths and cross-sectional areas of two wires **X** and **Y** of the same metal.

Wire	Length / cm	Cross-sectional area / mm^2
X	47	0.10
Y	23	0.40

The resistance of **X** is 6.0 Ω.
The temperature of **Y** is the same as the temperature of **X**.

What is the resistance of **Y**?

[1 mark]

A 0.12 Ω ○

B 0.73 Ω ●

C 1.2 Ω ○

D 3.1 Ω ○

Do not write outside the box

2 0 A superconducting material has a critical temperature T_c.

Which graph shows the variation of resistivity ρ with temperature T?

[1 mark]

A

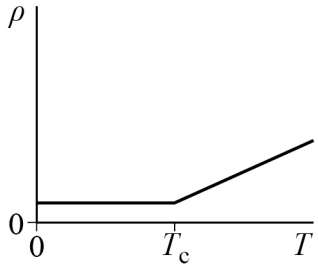

B

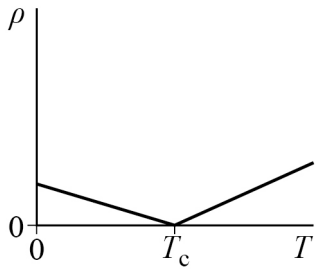

C

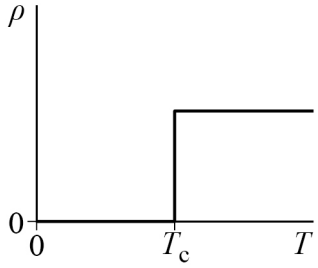

D

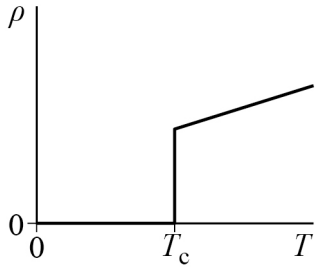

Do not write outside the box

2 1 **X**, **Y** and **Z** are three networks of resistors.

X

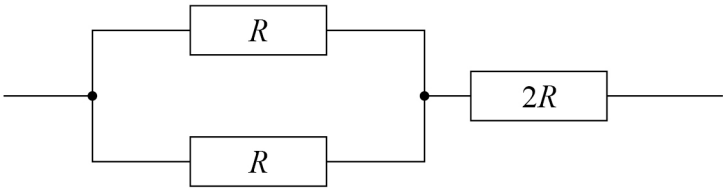

Y

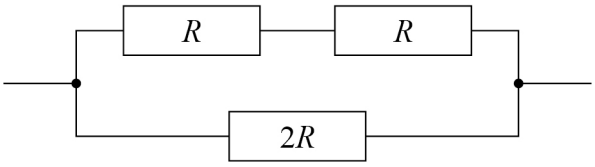

Z

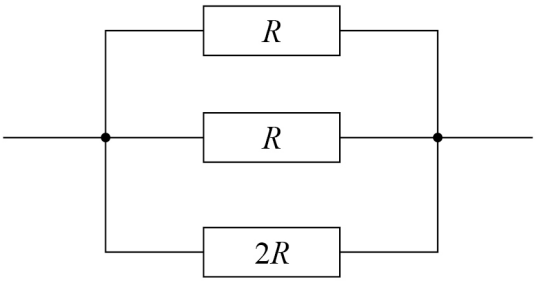

Which gives the networks in order of largest total resistance to smallest total resistance?

[1 mark]

A **X**, **Y**, **Z**

B **Y**, **X**, **Z**

C **Z**, **X**, **Y**

D **Z**, **Y**, **X**

Do not write outside the box

2 2 A nucleus of bismuth-209 $\left(^{209}_{83}\text{Bi}\right)$ absorbs a neutron. The newly formed nucleus subsequently decays in two stages to form a nucleus of nuclide **X**.
One beta-minus particle and one alpha particle are emitted during these two decays.

What are the nucleon number and the proton number of **X**?

[1 mark]

	Nucleon number	Proton number	
A	205	82	○
B	205	83	○
C	206	82	●
D	206	83	○

2 3 The concept of exchange particles was introduced to explain forces between elementary particles.

This concept requires that exchange particles have

[1 mark]

A charge. ○

B momentum. ●

C phase. ○

D rest mass. ○

Turn over ►

Do not write outside the box

2 4 A stationary wave of wavelength λ is produced on a string.

What are the phase difference and the distance between adjacent antinodes?

[1 mark]

	Phase difference	Distance	
A	$\frac{\pi}{2}$	$\frac{\lambda}{4}$	○
B	$\frac{\pi}{2}$	$\frac{\lambda}{2}$	○
C	π	$\frac{\lambda}{4}$	○
D	π	$\frac{\lambda}{2}$	●

2 5 A central diffraction maximum is observed when monochromatic light of wavelength λ passes through a single slit of width s.

Which combination of changes to λ and s will always produce a wider central diffraction maximum?

[1 mark]

	Change to λ	Change to s	
A	decrease	decrease	○
B	decrease	increase	○
C	increase	decrease	●
D	increase	increase	○

Do not write outside the box

2 6 A ball is dropped from a height h. The ball hits the ground with a velocity v.

The ball is now dropped from a height of $2h$.
Air resistance is negligible.

What is the velocity at which the ball hits the ground?

[1 mark]

A v ○

B $\sqrt{2v}$ ○

C $v\sqrt{2}$ ●

D $2v$ ○

Turn over for the next question

Do not write outside the box

2 7 The graph shows the variation of stress with strain for a material.

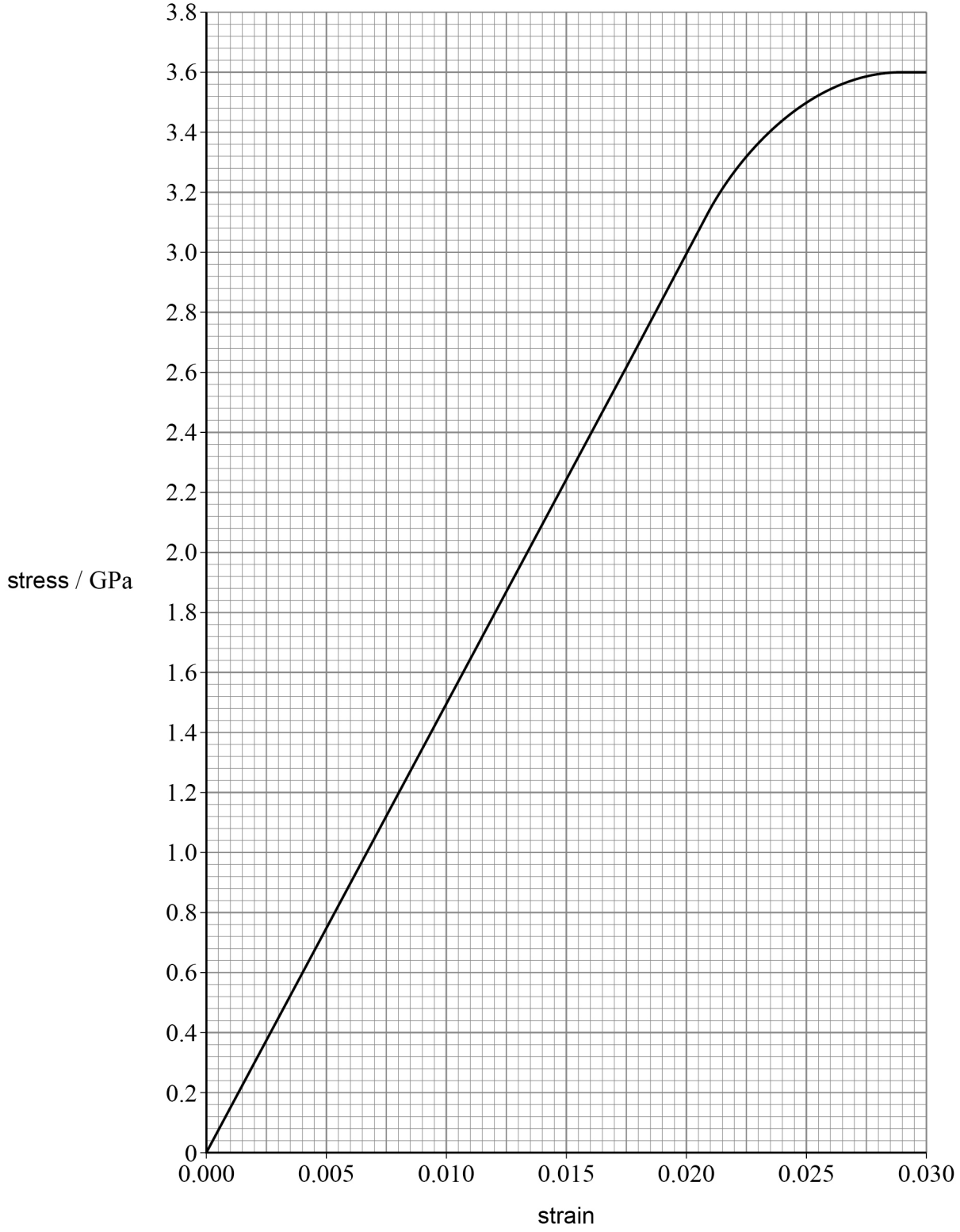

Do not write outside the box

What is the Young modulus of the material?

[1 mark]

A 1.2×10^5 Pa

B 1.5×10^5 Pa

C 1.2×10^{11} Pa

D 1.5×10^{11} Pa

2 8 Which row shows the resistance of an ideal ammeter and of an ideal voltmeter?

[1 mark]

	Resistance of ammeter	Resistance of voltmeter
A	zero	zero
B	zero	infinite
C	infinite	zero
D	infinite	infinite

2 9 The current in a resistor is 15 mA.

How many electrons pass through the resistor in 3 minutes?

[1 mark]

A 2.8×10^{17}

B 1.7×10^{19}

C 2.8×10^{20}

D 1.7×10^{22}

Do not write outside the box

3 0 Three resistors are connected in series with a 9.0 V battery of negligible internal resistance.

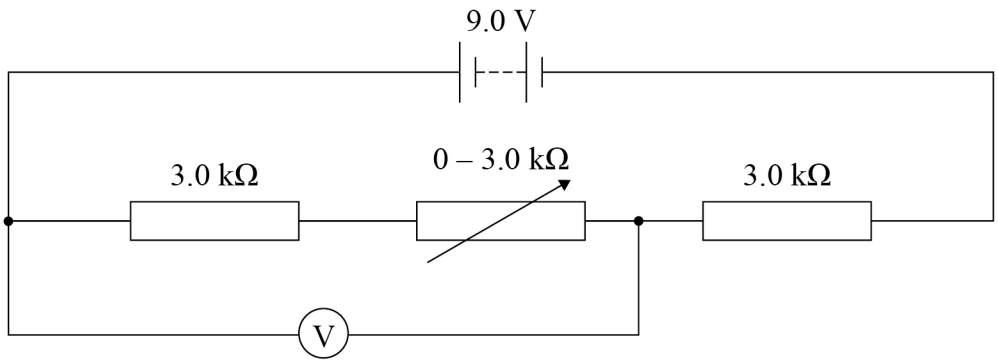

The resistance of the variable resistor is varied from 0 to 3.0 kΩ.

The range of potential difference observed on the voltmeter is

[1 mark]

A 0 to 6.0 V ○

B 3.0 V to 6.0 V ○

C 4.5 V to 6.0 V ●

D 4.5 V to 9.0 V ○

Do not write outside the box

3 1 The current–voltage characteristic between 0 and 6.0 V is required for a filament lamp. The lamp is connected in a circuit with a battery of emf 6.0 V and negligible internal resistance.

Which circuit should be used?

[1 mark]

A

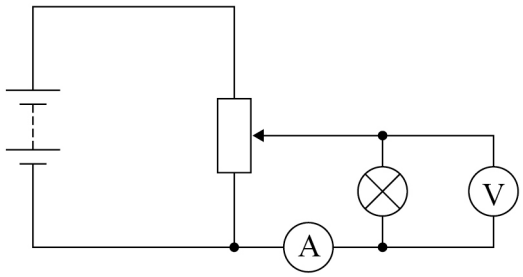

B

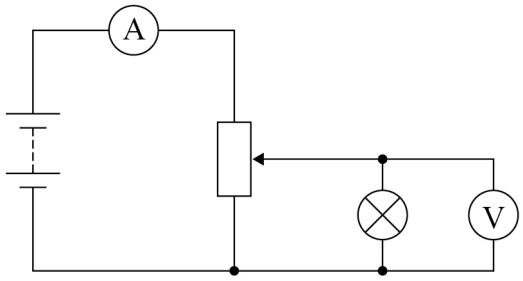

C

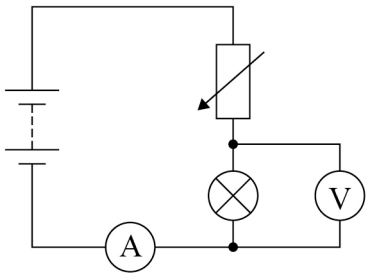

D

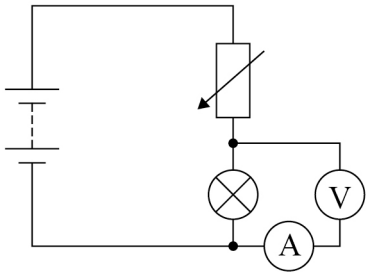

Do not write outside the box

3 2 The diagram shows a circuit containing three resistors **X**, **Y** and **Z**.

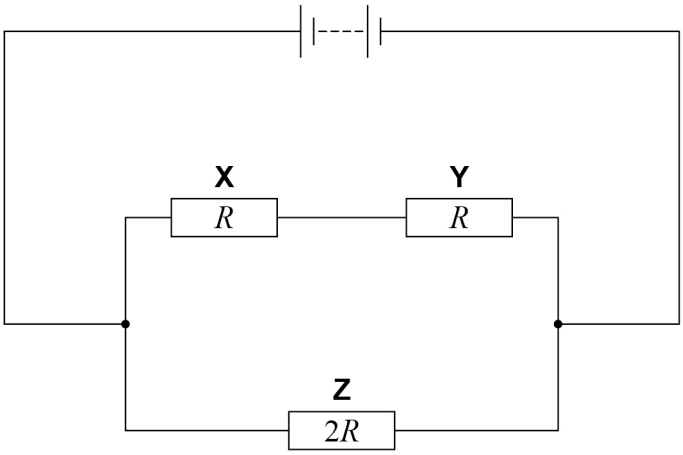

X and **Y** each have resistance R.
Z has resistance $2R$.

What is $\frac{\text{power in } \mathbf{X}}{\text{power in } \mathbf{Z}}$?

[1 mark]

A $\frac{1}{4}$ ○

B $\frac{1}{2}$ ●

C 2 ○

D 4 ○

3 3 A pellet of mass $25\ \text{g}$ travelling horizontally at $40\ \text{m s}^{-1}$ enters a fixed wooden block. The pellet stops after travelling a horizontal distance of $2.5\ \text{cm}$ in the block.

What is the average resistive force acting on the pellet?

[1 mark]

A $20\ \text{N}$ ○

B $800\ \text{N}$ ●

C $1600\ \text{N}$ ○

D $8000\ \text{N}$ ○

Do not write outside the box

3 4 The graph shows the variation of force with distance between a proton and a neutron.

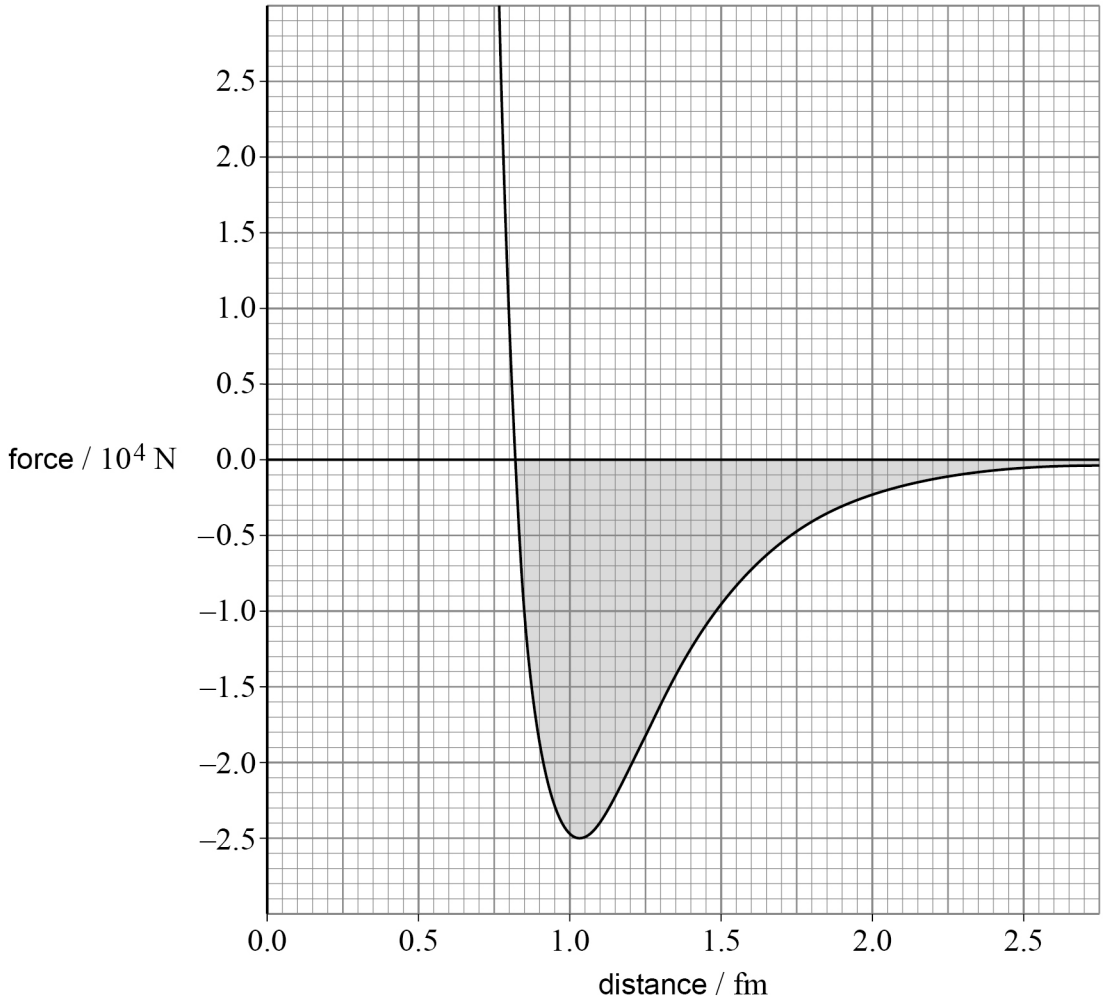

The shaded area represents

[1 mark]

A acceleration. ○

B impulse. ○

C rate of change of kinetic energy. ○

D work done. ●

30

END OF QUESTIONS

Do not write outside the box

There are no questions printed on this page

DO NOT WRITE ON THIS PAGE
ANSWER IN THE SPACES PROVIDED

Do not write outside the box

Question number	**Additional page, if required.** **Write the question numbers in the left-hand margin.**

Do not write outside the box

Question number	**Additional page, if required.** **Write the question numbers in the left-hand margin.**

Do not write outside the box

Question number	**Additional page, if required.** **Write the question numbers in the left-hand margin.**

Do not write outside the box

There are no questions printed on this page

DO NOT WRITE ON THIS PAGE
ANSWER IN THE SPACES PROVIDED

Copyright information

For confidentiality purposes, all acknowledgements of third-party copyright material are published in a separate booklet. This booklet is published after each live examination series and is available for free download from www.aqa.org.uk

Permission to reproduce all copyright material has been applied for. In some cases, efforts to contact copyright-holders may have been unsuccessful and AQA will be happy to rectify any omissions of acknowledgements. If you have any queries please contact the Copyright Team.

Copyright © 2023 AQA and its licensors. All rights reserved.