AQA A-LEVEL PHYSICS · 7408

PHYSICS

EXAM QUESTION PACK

3.7.5 MAGNETIC FIELDS

SCORE	PERCENTAGE
/135	%

STEMUP

These questions belong to AQA, not to us.

The examination questions, mark schemes and examiner reports in this pack were written and published by AQA. They are past assessment materials, reproduced here so that students can revise from them.

What we do not own

STEMUP is not affiliated with AQA and does not own, and makes no claim to own, any of the question, mark scheme or examiner report material in this pack. AQA has not endorsed, approved or been involved in the production of it. AQA and the qualification titles used here belong to their respective owners and appear for identification only.

Where to find the originals

AQA publishes its past papers, mark schemes and examiner reports free of charge. Always check the current specification at aqa.org.uk before you revise, because content and wording can change between series.

If you hold the rights to any material in this pack and would like it amended or removed, contact admin@stemup.co.uk and we will act on it.

Q1.

(a) State Lenz's law.

_____

_____

_____

(1)

(b) Lenz's law can be demonstrated using a bar magnet and a coil of wire connected to a sensitive ammeter as shown in **Figure 1**.

Figure 1

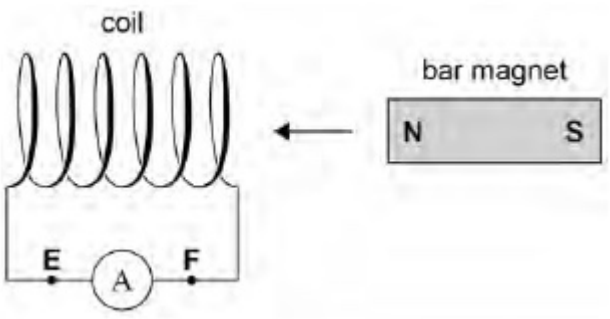

The bar magnet is moved towards the coil and is then brought to a halt.

State how the reading on the ammeter changes during this process.

_____

_____

_____

(1)

(c) During the demonstration an induced current is detected by the ammeter. The induced current is in the direction **E** to **F**.
Explain how this demonstrates Lenz's law.

_____

_____

_____

_____

_____

(2)

(d) **Figure 2** shows an arrangement for investigating induced emf.

Figure 2

STEMUP.CO.UK

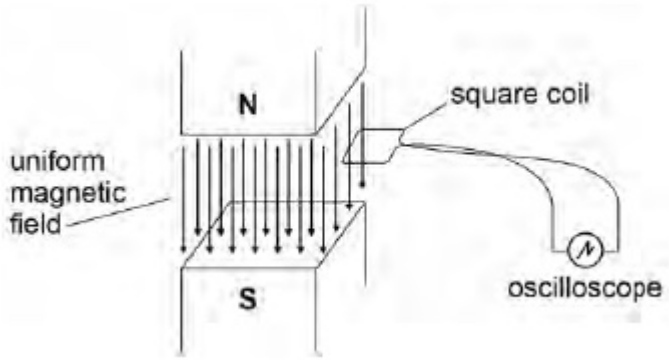

As shown, the uniform vertical magnetic field is confined to the gap between the poles of the magnet. The plane of the square coil is horizontal and is made of conducting wire. The coil consists of a single turn and is attached by flexible wire to an oscilloscope.

The oscilloscope gives a reading of 2.9×10^{-4} V when the coil is moved at uniform speed from position **G** outside the field to position **H** inside the field, as shown in **Figure 3**.

Figure 3

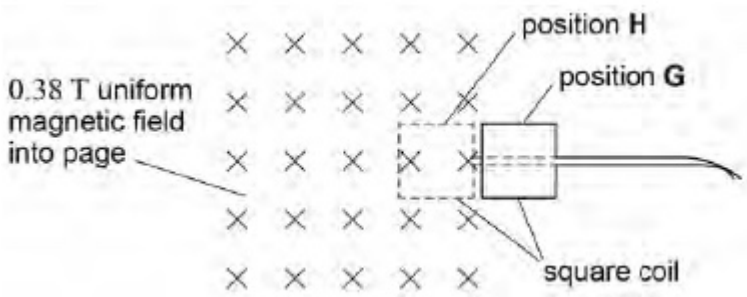

Length of side of square coil = 32 mm

Magnetic flux density of uniform magnetic field = 0.38 T

Calculate the time taken to move the coil from position **G** to position **H**.

time = _____ s

(2)

(e) The square coil is rotated through 360° at a constant angular speed about the horizontal axis shown in **Figure 4**.

Figure 4

STEMUP.CO.UK

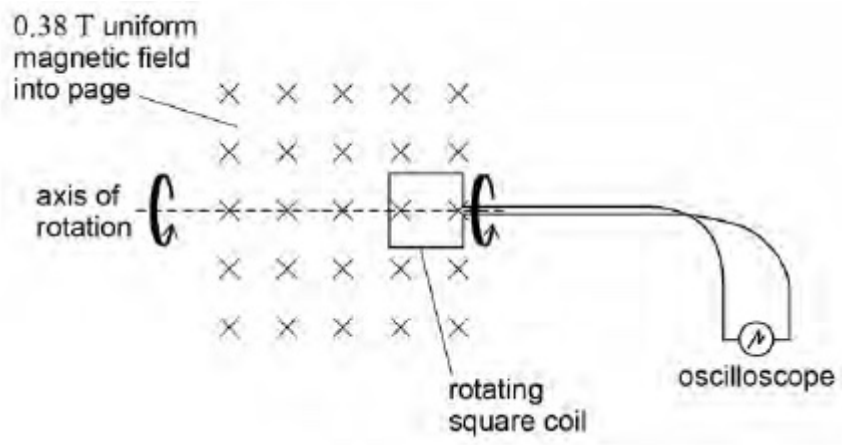

Calculate the angular speed of the coil when the maximum reading on the oscilloscope is 5.1 mV

angular speed = _____ rad s^{-1}

(2)

(Total 8 marks)

Q2.

Different magnetic fields are present in the two chambers shown. A particle enters the first chamber at a velocity of 80 m s^{-1} and is deflected into a circular path of radius 200 mm
In the second chamber it follows a circular path of radius 100 mm

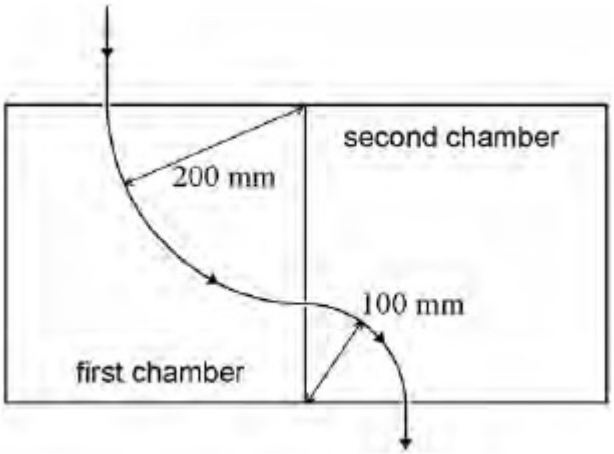

The particle leaves the second chamber at a speed of

A 20 m s^{-1}

STEMUP.CO.UK

B 40 m s^{-1} ⬭

C 80 m s^{-1} ⬭

D 160 m s^{-1} ⬭

(Total 1 mark)

Q3.

The diagram shows a clockwise current I in a circular coil placed in a uniform magnetic field B with the plane of the coil perpendicular to the magnetic field.

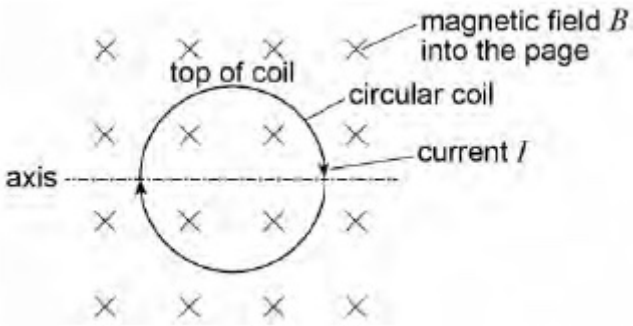

What is the effect on the coil of the interaction between the current and the magnetic field?

A It rotates about the axis with the top moving out of the page. ⬭

B It rotates about the axis with the top moving into the page. ⬭

C It causes an increase in the diameter of the coil. ⬭

D It causes a decrease in the diameter of the coil. ⬭

(Total 1 mark)

Q4.

A transformer has an efficiency of 80%
It has 7000 turns on its primary coil and 175 turns on its secondary coil. When the primary of the transformer is connected to a 240 V ac supply, the secondary current is 8.0 A

What are the primary current and secondary voltage?

	Primary current / mA	Secondary voltage / V	
A	250	6.0	⬭
B	160	6.0	⬭
C	250	9600	⬭

STEMUP.CO.UK

D	160	9600	⬭

(Total 1 mark)

Q5.

This question is about using a digital balance to investigate the force on a wire placed in a magnetic field when there is an electric current in the wire.

A student carries out the procedure shown in **Figure 1** and **Figure 2**.
A metre ruler is pivoted at the 1.0 cm mark and a prism is placed on a digital balance. The free end of the ruler is raised and the balance is turned on and then set to zero, as shown in **Figure 1**.

Figure 1

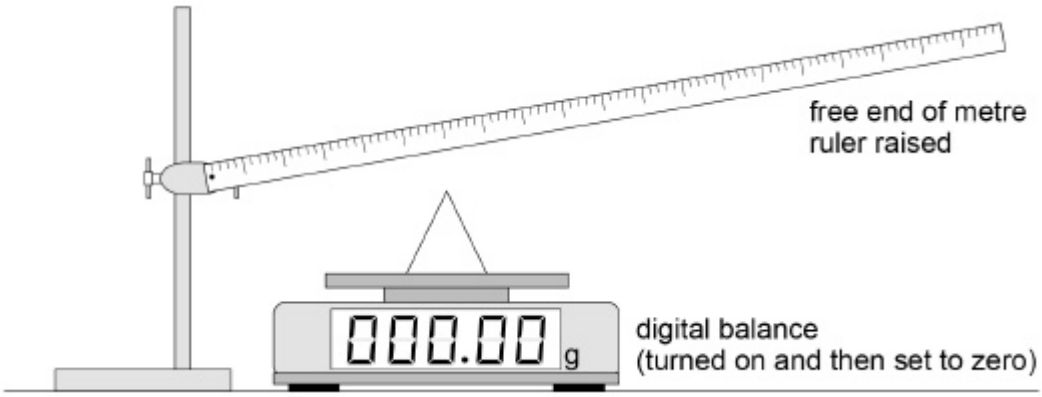

The ruler is then supported by the prism with the apex of the prism at the 30.0 cm mark as shown in **Figure 2**. The height of the pivot is adjusted so that the ruler is horizontal.

Figure 2

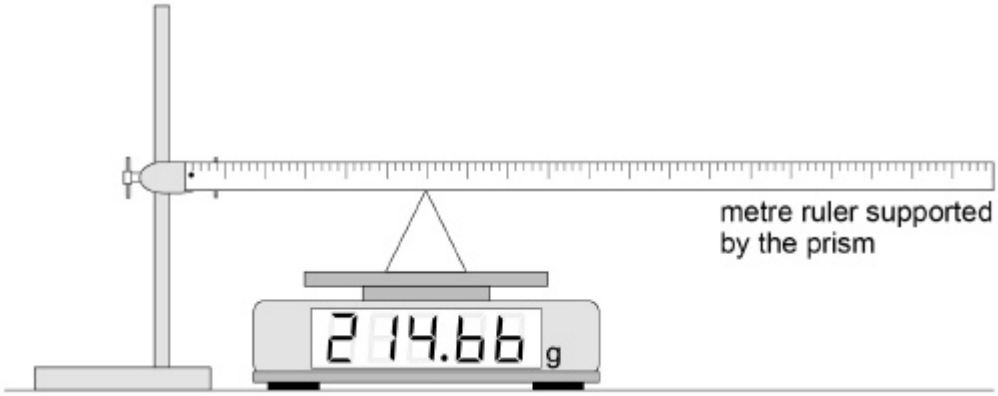

(a) Deduce the mass of the ruler.
State **one** assumption you make.

mass of ruler = _____ g

STEMUP.CO.UK

assumption _____

_____

(3)

(b) The student attaches a uniform wire to the upper edge of the ruler, as shown in **Figure 3**.

The ends of the wire are connected to terminal blocks **P** and **Q** which are fixed firmly to the bench. A power supply and an ammeter are connected between **P** and **Q**.

These modifications cause the balance reading to increase slightly.

A horizontal uniform magnetic field is applied, perpendicular to the wire, between the 85 cm and 90 cm marks, as shown in the close-up diagram in **Figure 3**.

Figure 3

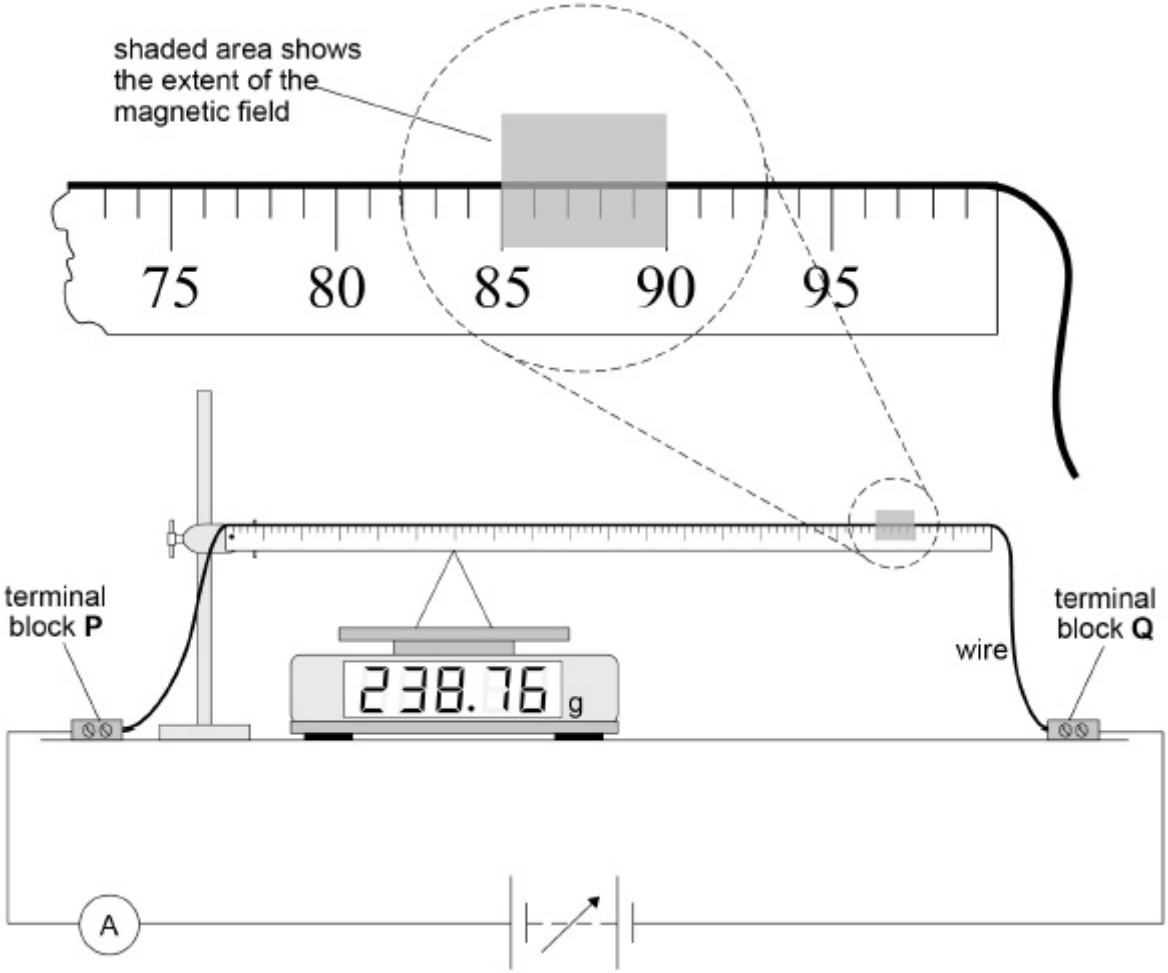

The balance reading M is recorded for increasing values of current I.
A graph of these data is shown in **Figure 4**.

Figure 4

STEMUP.CO.UK

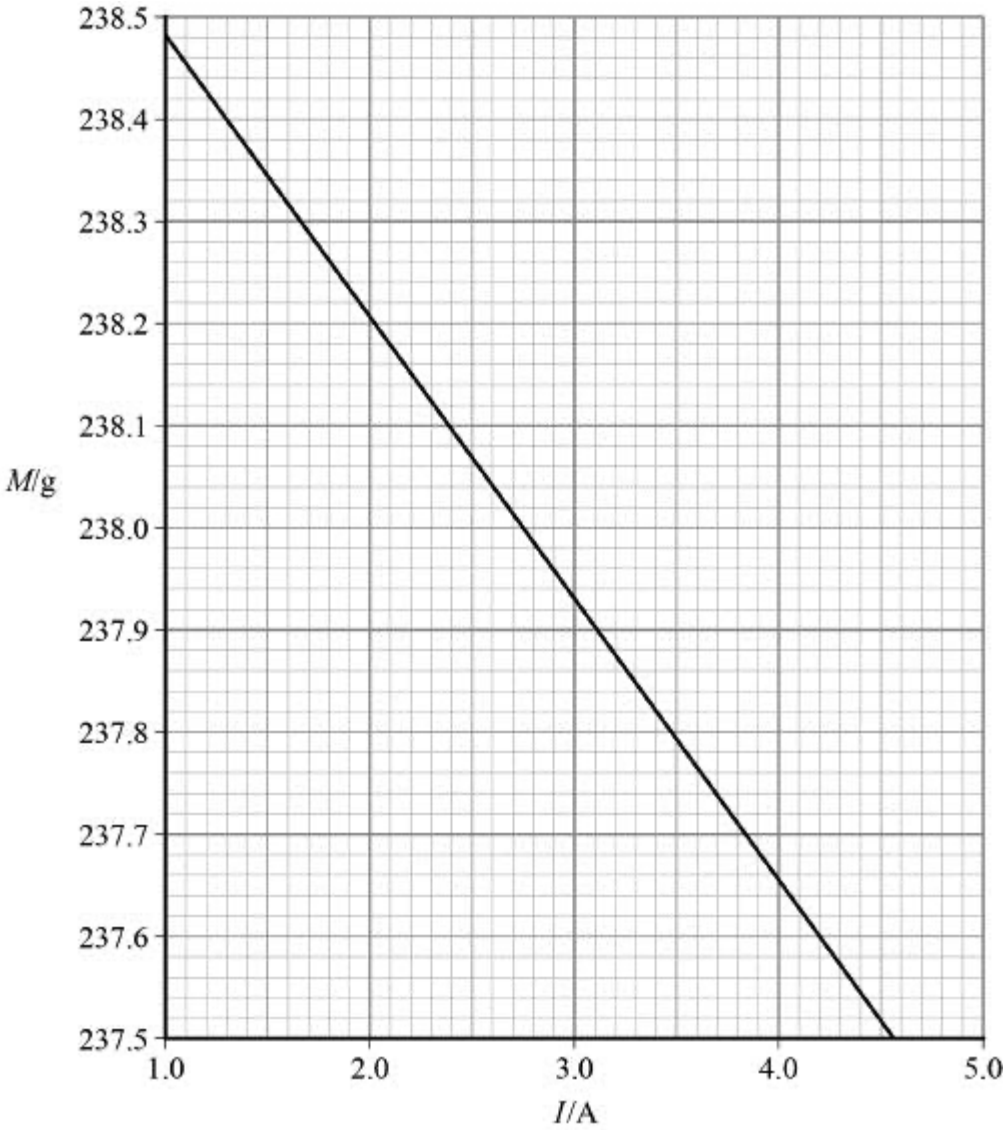

State and explain the direction of the horizontal uniform magnetic field.

(3)

(c) It can be shown that B, the magnitude of the magnetic flux density of the horizontal uniform magnetic field, is given by

$$B = \frac{\sigma}{3L}$$

STEMUP.CO.UK

where

σ = change in force acting on the prism per unit current in the wire
L = length of the region where the magnetic field cuts through the wire.

Determine B.

B = _____ T

(3)

(d) The experiment is repeated with the ruler pivoted at the 99.0 cm mark. Nothing else is changed from **Figure 3**.

This arrangement is shown in **Figure 5**.

Figure 5

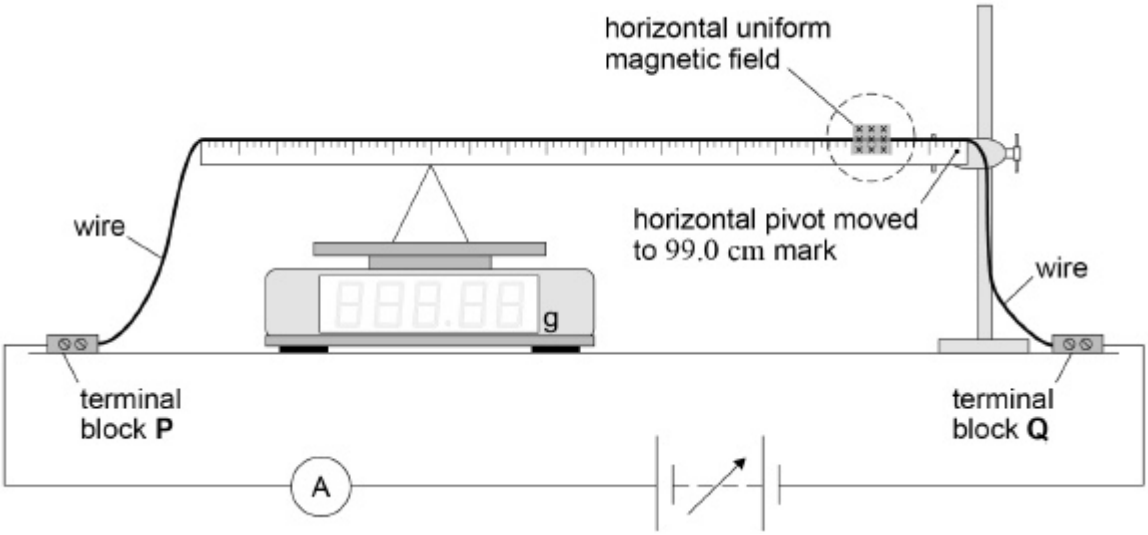

Tick (✓) **one** box in row 1 and **one** box in row 2 of the table to identify the effect, if any, on the magnitude of the forces acting on the apparatus as a certain current is passed through the wire.

Tick (✓) **one** box in row 3 and **one** box in row 4 of the table to identify the effect, if any, on the graph produced for this modified experiment compared with the graph in **Figure 4**.

		Reduced	**No effect**	**Increased**
1	Force acting on the current-carrying wire due to the horizontal uniform magnetic field			
2	Force acting on the prism due to the pivoted ruler			

STEMUP.CO.UK

3	Gradient of the graph			
4	Vertical intercept of the graph			

(3)

(e) **Figure 6** shows the balance being used to measure the forces between two wires. The connections joining these wires to the power supply are not shown.

The pan of the balance moves a negligible amount during use and it supports a straight conducting wire **X** of horizontal length L.
Terminal blocks are used to connect **X** into the circuit. The weight of these does not affect the balance reading.
A second conducting wire **Y** is firmly supported a distance d above **X**.

Show, by adding detail to **Figure 6**, the wire connections that complete the circuit. The currents in **X** and **Y** must have the same magnitude and be in the directions indicated.

Figure 6

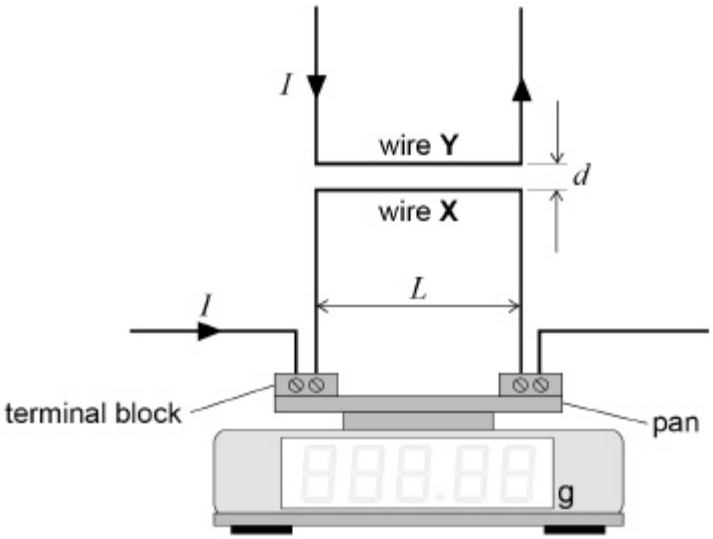

(2)

(f) The vertical force F on wire **X** due to the magnetic field produced by wire **Y** is given by

STEMUP.CO.UK

$$F = \frac{kI^2L}{d}$$

where

k is a constant
d is the perpendicular distance between **X** and **Y**
I is the current in the wires

and
L is the horizontal length of wire **X**.

A student wants to measure k using the arrangement in **Figure 6**.

The student is told that the following restrictions must apply:

- L is fixed
- I must not exceed 5.0 A
- the result for k must be obtained using a **graphical method**
- the experimental procedure must involve **only one** independent variable.

Explain what the student could do to find k.

_____

_____

_____

_____

_____

_____

_____

_____

_____

_____

_____

(5)
(Total 19 marks)

Q6.

Figure 1 shows two magnets, supported on a yoke, placed on an electronic balance.

Figure 1

STEMUP.CO.UK

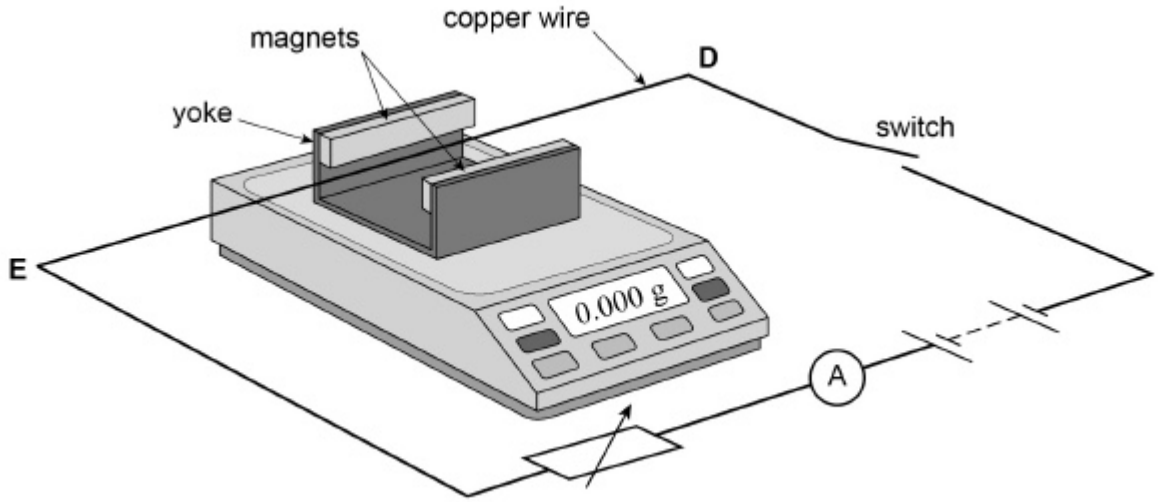

The magnets produce a uniform horizontal magnetic field in the region between them. A copper wire **DE** is connected in the circuit shown in **Figure 1** and is clamped horizontally at right angles to the magnetic field.

Figure 2 shows a simplified plan view of the copper wire and magnets.

Figure 2

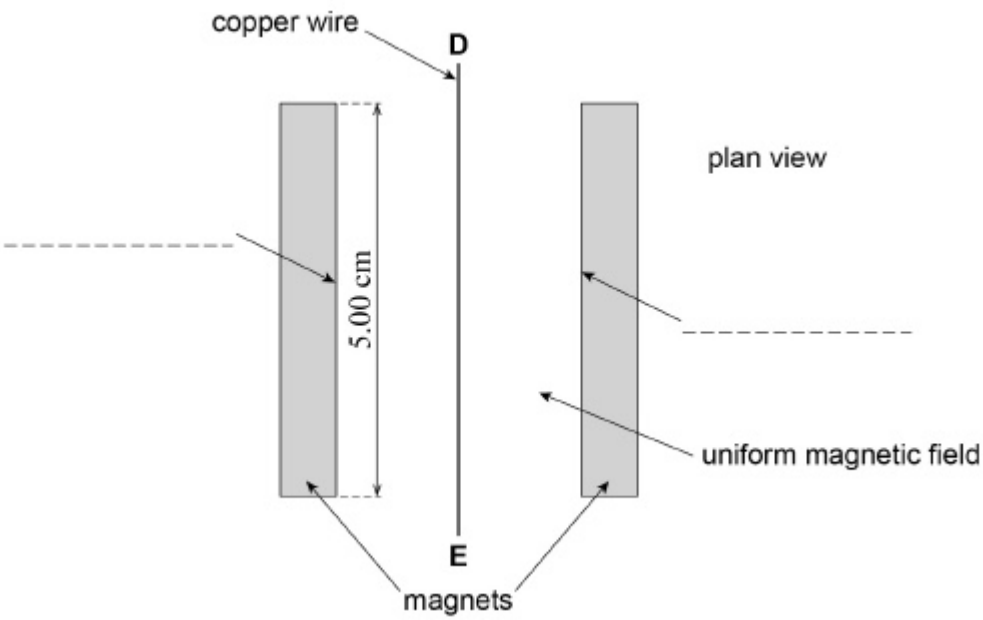

When the apparatus is assembled with the switch open, the reading on the electronic balance is set to 0.000 g. This reading changes to a positive value when the switch is closed.

(a) Which of the following correctly describes the direction of the force acting on the wire **DE** due to the magnetic field when the switch is closed?

Tick (✓) the correct box.

towards the left magnet in **Figure 2** ☐

STEMUP.CO.UK

towards the right magnet in **Figure 2** ☐

vertically up ☐

vertically down ☐

(1)

(b) Label the poles of the magnets by putting **N** or **S** on each of the two dashed lines in **Figure 2**.

(1)

(c) Define the tesla.

_____

_____

_____

(1)

(d) The magnets are 5.00 cm long. When the current in the wire is 3.43 A the reading on the electronic balance is 0.620 g.

Assume the field is uniform and is zero beyond the length of the magnets.

Calculate the magnetic flux density between the magnets.

magnetic flux density = _____ T

(2)

(Total 5 marks)

Q7.

A cyclotron has two D-shaped regions where the magnetic flux density is constant.
The D-shaped regions are separated by a small gap.
An alternating electric field between the D-shaped regions accelerates charged particles.
The magnetic field causes the charged particles to follow a circular path.

The diagram shows the path followed by a proton that starts from **O**.

STEMUP.CO.UK

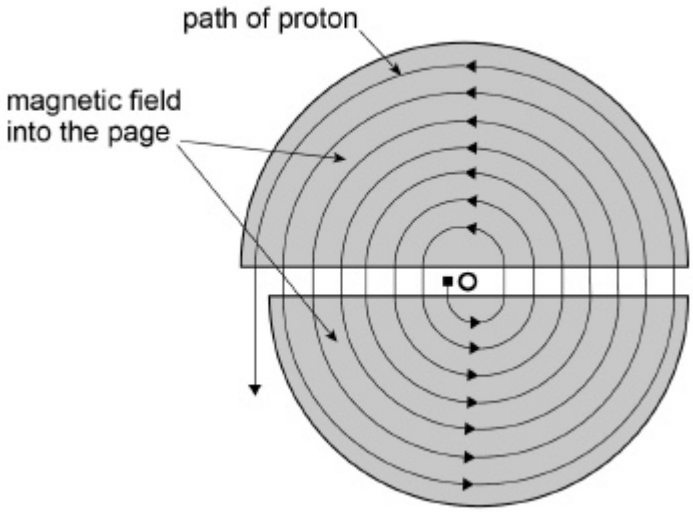

(a) Explain why it is **not** possible for the magnetic field to alter the speed of a proton while it is in one of the D-shaped regions.

_____

_____

_____

_____

_____

(1)

(b) Derive an expression to show that the time taken by a proton to travel round one semi-circular path is independent of the radius of the path.

(3)

(c) The maximum radius of the path followed by the proton is 0.55 m and the magnetic flux density of the uniform field is 0.44 T.

Ignore any relativistic effects.

Calculate the maximum speed of a proton when it leaves the cyclotron.

maximum speed = _____ m s^{-1}

(2)

STEMUP.CO.UK

(Total 6 marks)

Q8.

A coil with 20 circular turns each of diameter 60 mm is placed in a uniform magnetic field of flux density 90 mT.

Initially the plane of the coil is perpendicular to the magnetic field lines as shown in **Figure X**.

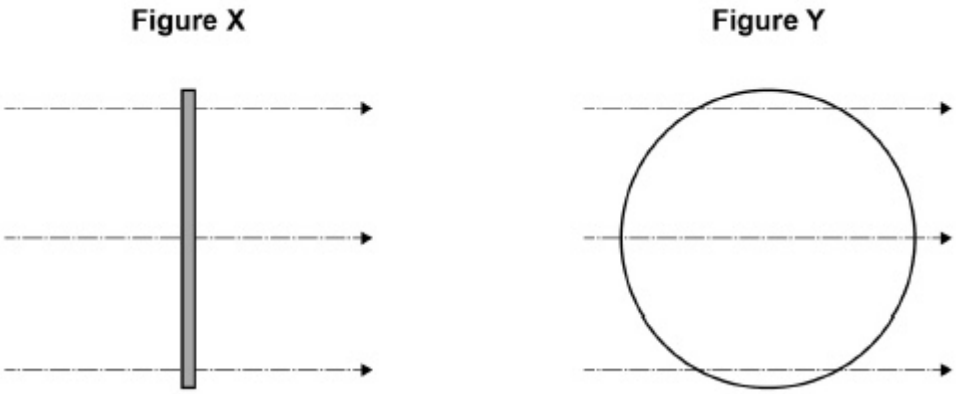

The coil is rotated about a vertical axis by 90° in a time of 0.20 s so that its plane becomes parallel to the field lines as shown in **Figure Y**.
Assume that the rate of change of flux linkage remains constant.

What is the emf induced in the coil?

A zero

B 1.3 mV

C 25 mV

D 100 mV

(Total 1 mark)

Q9.

Read the following passage and answer the questions that follow.

A mass spectrometer is an instrument for measuring the masses of isotopes. The main working parts of the instrument are shown in **Figure 1**.

Figure 1

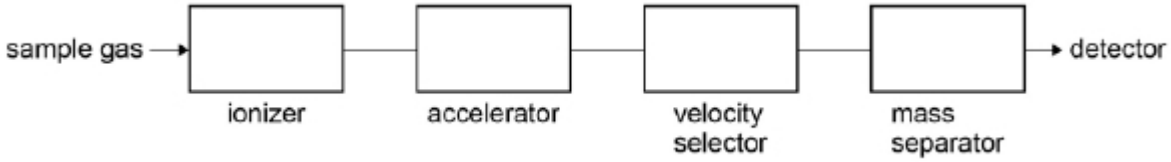

Figure 2 shows the components in more detail. Positive ions are created in the ionizer. Some of these ions enter the accelerator where they are accelerated by a potential

STEMUP.CO.UK

difference V_A. The ions emerge from the accelerator with different speeds and enter the velocity selector.

The velocity selector contains a region where there is a uniform magnetic field at right angles to an electric field. This electric field is formed between two parallel plates held at a potential difference V_D. This combination of fields only allows ions of a particular velocity to enter the mass separator. Here ions of different mass are separated by a uniform magnetic field. Finally the ions are detected.

Figure 2

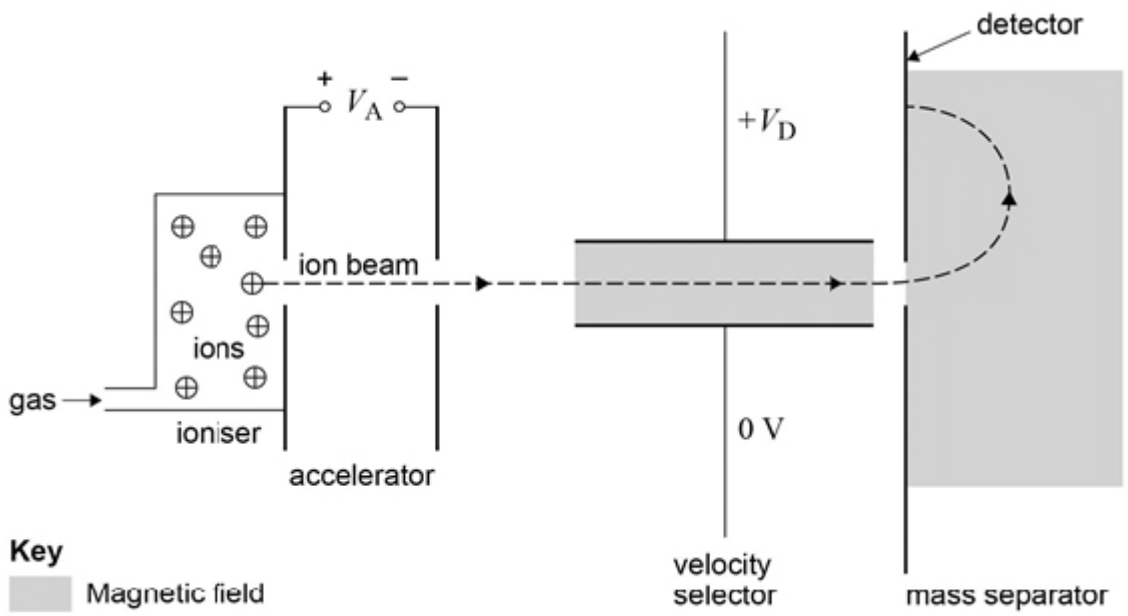

(a) Explain what is meant by ionisation.

_____

_____

(1)

(b) Discuss the energy transfers that take place in the accelerator as the ion passes through it. Assume the ions are in a perfect vacuum.

_____

_____

_____

_____

_____

(3)

(c) **Figure 3** shows the path taken by an ion that moves through the velocity selector at a velocity v.

Figure 3

STEMUP.CO.UK

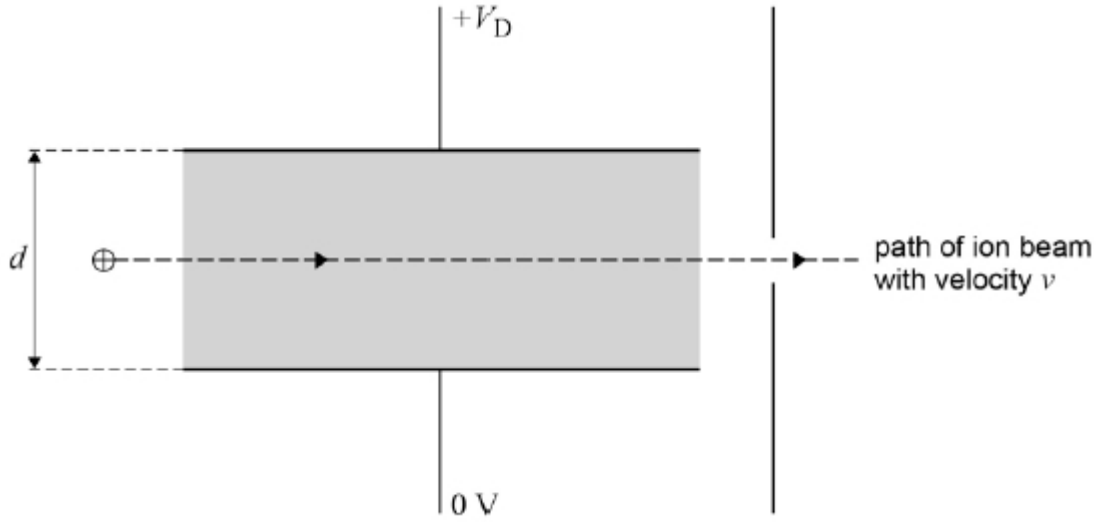

Discuss how the path changes when an ion enters the velocity selector with a velocity greater than v.

(3)

(d) Draw, on **Figure 3**, the path of the ion that is suggested by your answer to part **(c)**.

(1)

(e) Ions created in the ioniser may have the same charge but a different number of nucleons.

Discuss how the path of an ion in the mass separator is affected when it has more nucleons.

(2)

(f) Some ions are created with the same mass but a double charge. The path of the ions shown in **Figure 2** is that of a singly charged ion.

Compare, with justification, the path of a doubly charged ion through the mass spectrometer with that of a singly charged ion of the same mass.

STEMUP.CO.UK

(3)
(Total 13 marks)

Q10.

Figure 1 shows a step−down transformer used in a laptop power supply.

Figure 1

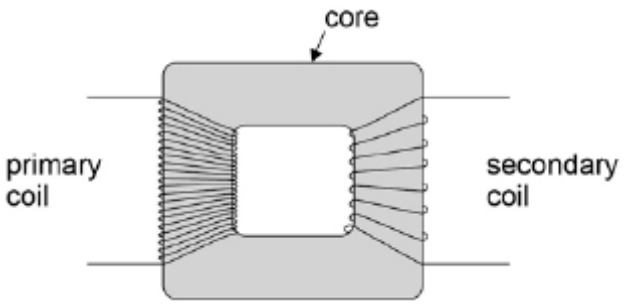

(a) Explain the purpose of the core in the transformer.

(1)

(b) Describe and explain **two** features of the core that improve the efficiency of the transformer.

1.

2.

(2)

(c) Explain why transformers only work continuously when supplied with an alternating current.

STEMUP.CO.UK

_____

_____

(1)

(d) The primary coil of the transformer is connected to a 230 V_{rms} ac supply. The current in the primary coil is 0.30 A_{rms}. The secondary coil has 300 turns and provides an output of 20 V_{rms} and a power of 65 W.

Calculate the number of turns on the primary coil.

number of turns on primary =_____

(1)

(e) Calculate the efficiency of the transformer.

efficiency _____

(2)

(Total 7 marks)

Q11.

A horizontal copper wire of mass 4.0×10^{-3} kg and length 80 mm is placed perpendicular to a horizontal magnetic field of flux density 0.16 T. The magnetic force acting on the wire supports the weight of the wire.

How many electrons are passing a point in the wire in each second?

A 1.9×10^{18} ○

B 1.9×10^{19} ○

C 1.9×10^{20} ○

D 1.9×10^{21} ○

(Total 1 mark)

Q12.

Two charged particles, $\mathbf{P}_1$ and $\mathbf{P}_2$, follow circular paths as they move at right angles to the

STEMUP.CO.UK

same uniform magnetic field. Both particles are travelling at the same speed.

The radius of the path travelled by **P**$_1$ is twice the radius of the path travelled by **P**$_2$.

The mass of **P**$_1$ is m and its charge is q.

What is the mass of **P**$_2$ and the charge of **P**$_2$?

	Mass of P$_2$	**Charge of P$_2$**	
A	$2m$	q	⬭
B	$2m$	$2q$	⬭
C	$\sqrt{2}\,m$	$\sqrt{2}\,q$	⬭
D	m	$2q$	⬭

(Total 1 mark)

Q13.

A rectangular coil of area A has N turns of wire. The coil is in a uniform magnetic field of flux density B with its plane parallel to the field lines.

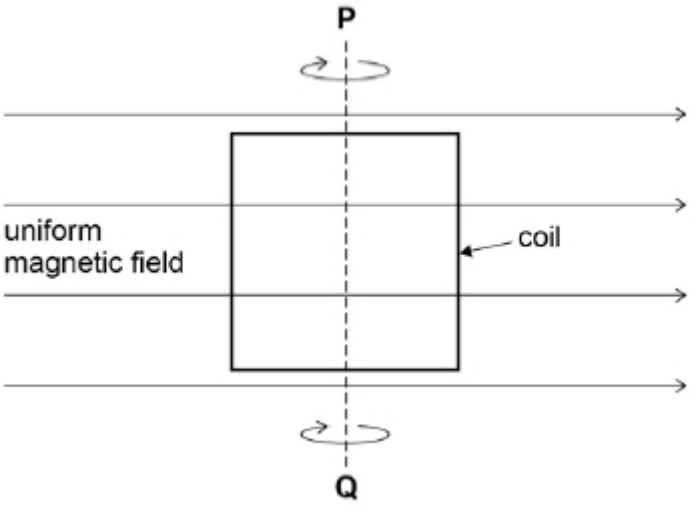

The coil is then rotated through an angle of 30° about axis **PQ**.

What are the correct initial value and correct final value of the magnetic flux linkage?

	Initial magnetic flux linkage	**Final magnetic flux linkage**	
A	0	$\frac{1}{2}BAN$	⬭
B	0	BAN	⬭

STEMUP.CO.UK

C	BAN	$\frac{1}{2}BAN$	⬭
D	BAN	BAN	⬭

(Total 1 mark)

Q14.

This question is about experiments to investigate the magnetic flux density around a current−carrying conductor.

A student is provided with apparatus shown in **Figure 1**.

Figure 1

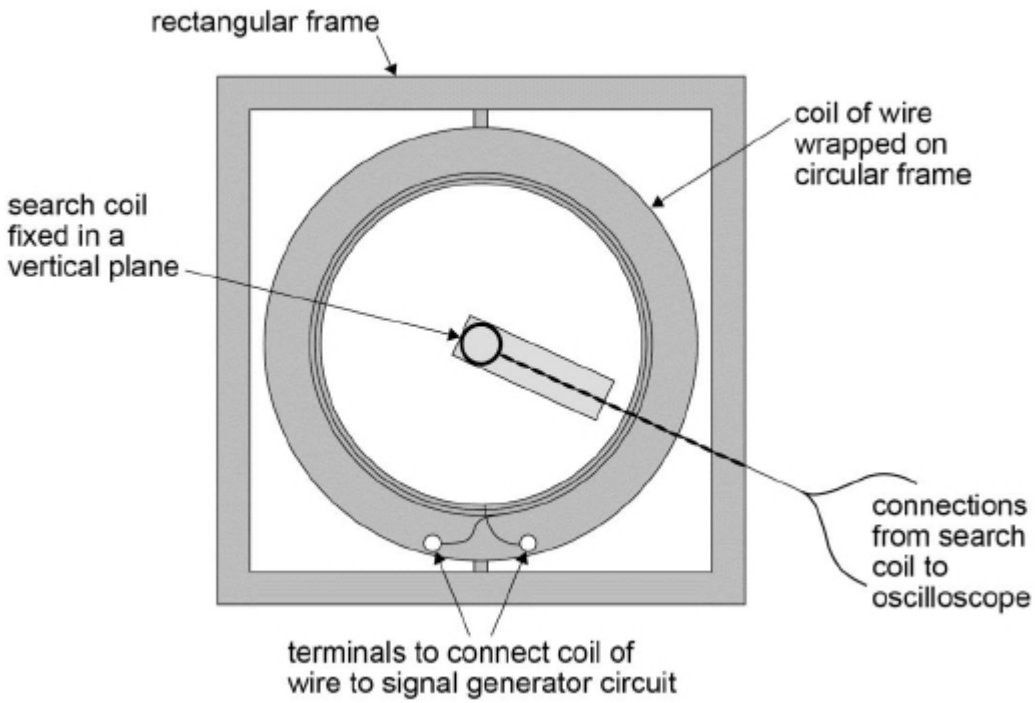

The apparatus consists of a circular frame on which is wound a coil of wire. This arrangement is mounted inside a rectangular frame.

The student clamps a search coil so it is co−axial with the circular coil then arranges the apparatus so that both frames and the search coil lie in the same vertical plane.

The coil of wire is connected to a signal generator and the search coil is connected to an oscilloscope. When a sinusoidal alternating current is passed through the coil an alternating emf is induced in the search coil.

The induced emf displayed on the oscilloscope is shown in **Figure 2**.

Figure 2

STEMUP.CO.UK

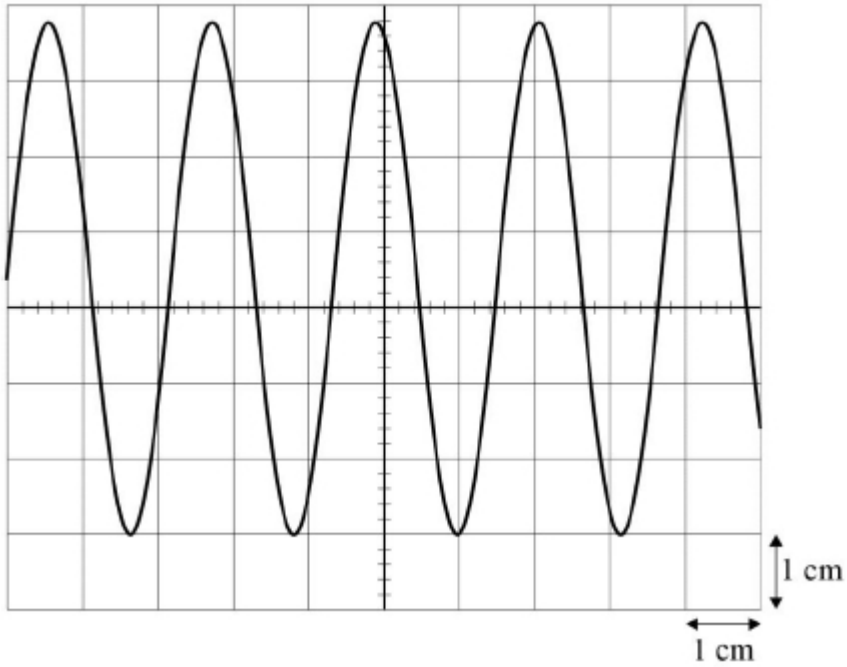

(a) Determine, using **Figure 2**, the frequency of the current in the coil.

Time−base setting of the oscilloscope is 0.2 ms cm^{-1}.

frequency = _____ Hz

(2)

(b) Determine, using **Figure 2**, the root mean square (rms) voltage of the emf induced in the search coil.

y−voltage gain of the oscilloscope = 10 mV cm^{-1}

rms voltage = _____ V

(2)

(c) **Figure 3** and **Figure 4** show the search coil and B_{peak}, the peak magnetic flux density produced by the current in the circular coil, when the apparatus is viewed from above.

Figure 3 shows the direction of B_{peak} when the search coil is arranged as in **Figure**

STEMUP.CO.UK

1.

Figure 4 shows the direction of B_{peak} when the circular frame is rotated through an angle θ.

The shaded area in these diagrams shows how the flux linked with the search coil changes as the circular coil is rotated.

Figure 3

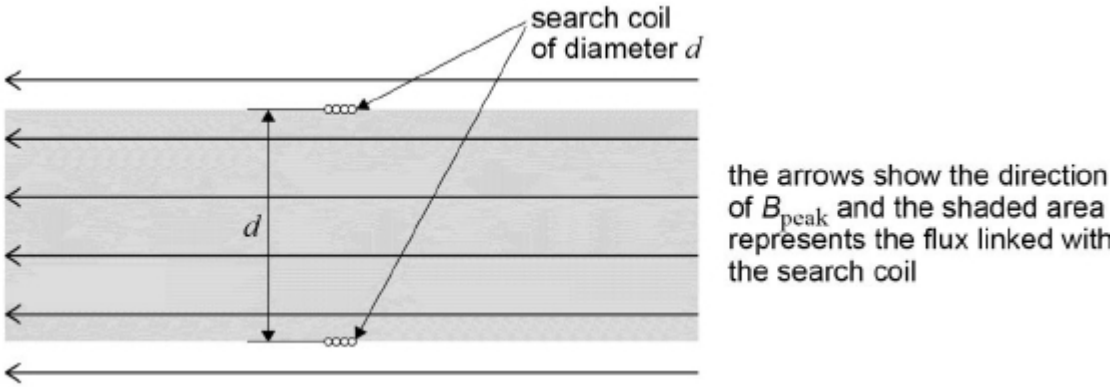

Figure 4

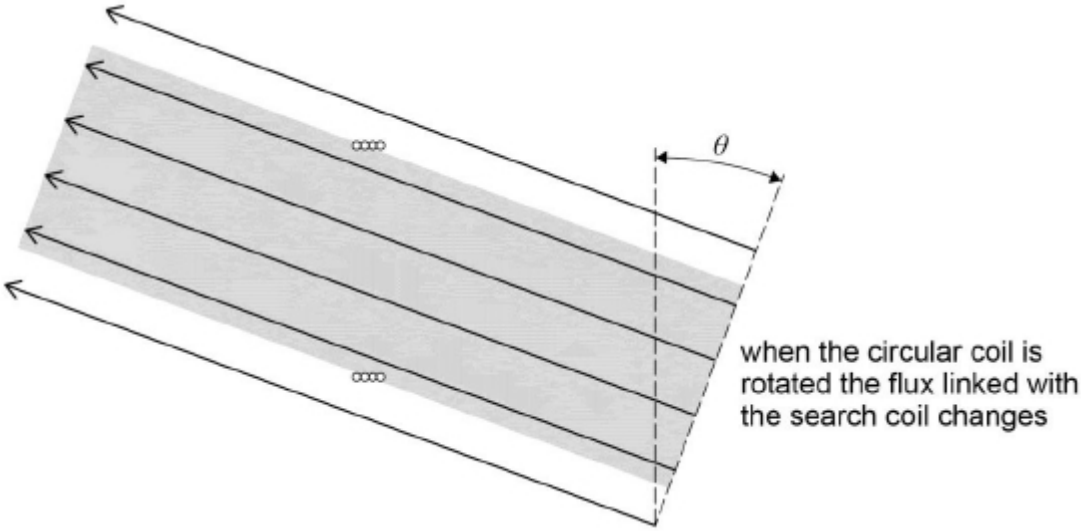

Explain why the flux linked with the coil is directly proportional to $\cos\theta$.

_____

_____

_____

_____

(2)

(d) The student clamps the rectangular frame so that it remains in a vertical plane. Without changing the position of the search coil she rotates the circular frame about a vertical axis so that it is turned through an angle, as shown in **Figure 5**.

STEMUP.CO.UK

Figure 5

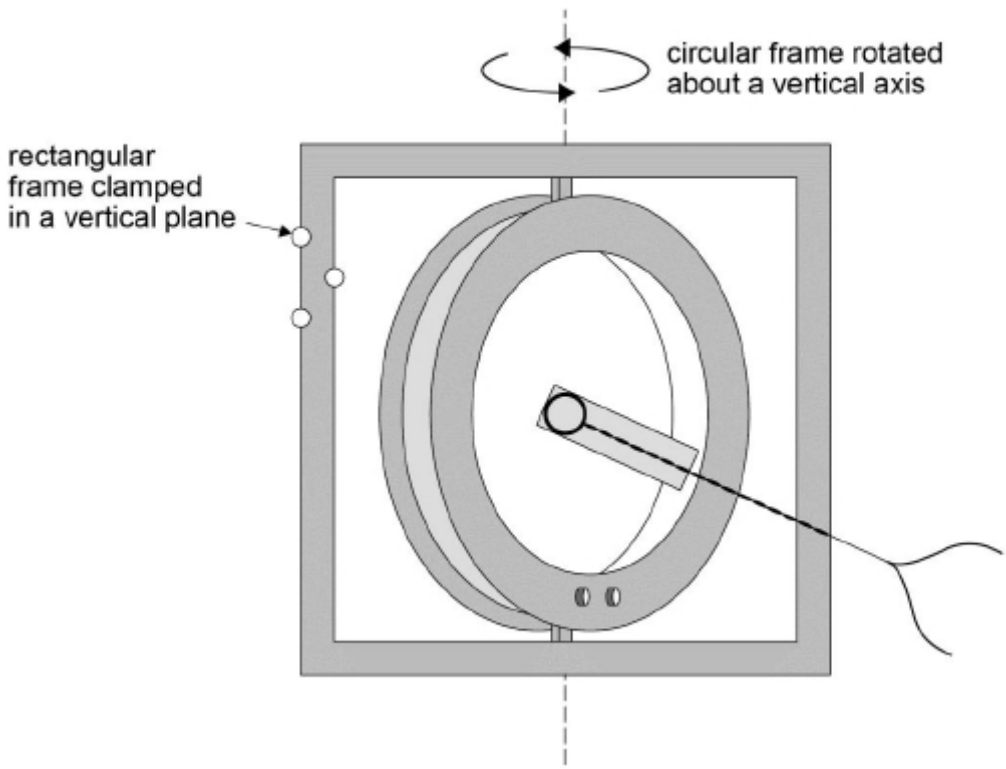

She turns off the time−base on the oscilloscope so that a vertical line is displayed on the screen. Keeping the y−voltage gain at 10 mV cm^{-1} she records the length l of the vertical line and the angle θ through which the circular frame has been rotated. She measures further results for l as θ is increased as shown in the table below.

θ/degree	l/cm	cosθ
10	6.7	
34	5.6	
50	4.4	
60	3.4	
72	2.1	
81	1.1	

Plot on **Figure 6** a graph to test if these data confirm that l is directly proportional to cosθ. Use the additional column in **Table 1** to record any derived data you use.

Figure 6

STEMUP.CO.UK

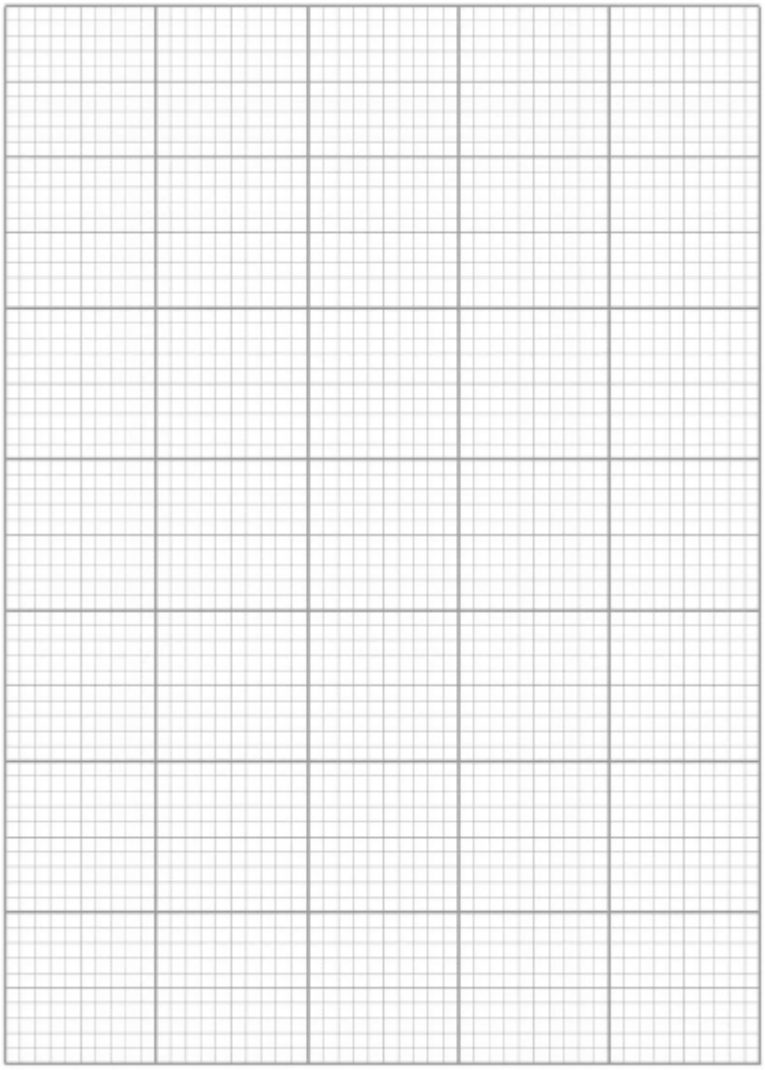

(4)

(e) State and explain whether the graph you have drawn confirms the suggestion that l is directly proportional to $\cos\theta$.

_____

_____

(1)

(f) When the time−base is switched off, the trace on the oscilloscope appears as shown in **Figure 7**.

Figure 7

STEMUP.CO.UK

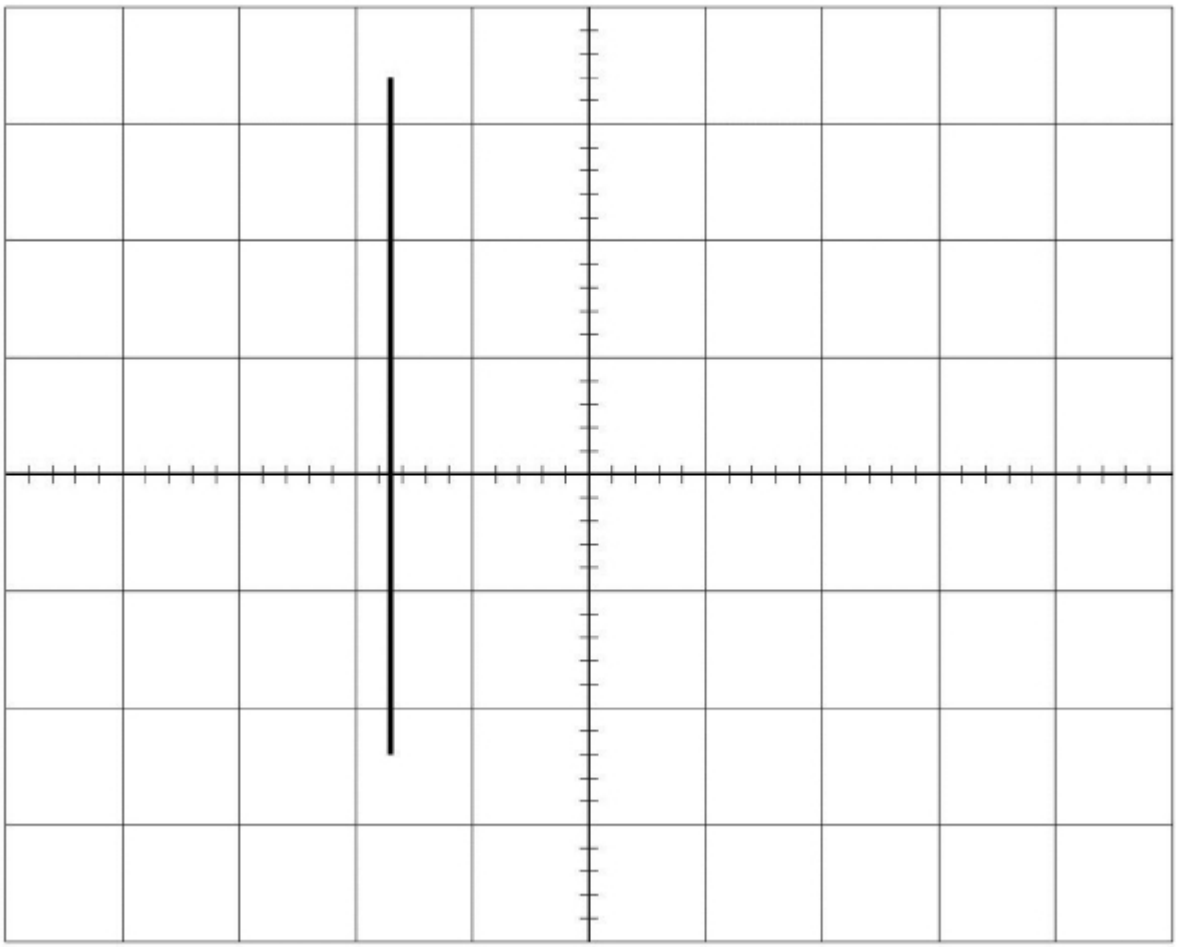

Describe **two** adjustments the student should make to the trace to reduce the uncertainty in l.

You should refer to specific controls on the oscilloscope. You may use **Figure 7** to illustrate your answer.

_____

_____

_____

_____

_____

_____

_____

(4)

(g) The student adjusts the signal generator so that the frequency of the current in the circular coil is doubled.

State and explain any changes she should make to the settings of the oscilloscope in part **(f)** so that she can repeat the experiment.

_____

STEMUP.CO.UK

(3)

(h) The apparatus is re−arranged as in **Figure 1** so that both coils lie in the same vertical plane and are co-axial along a line **PQ**.

The search coil is then moved a distance x along **PQ**, as shown in **Figure 8**.

Figure 8

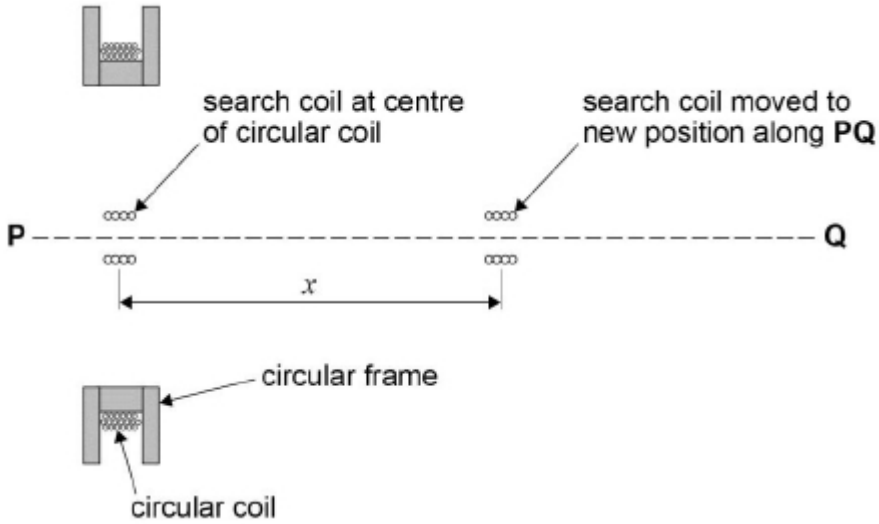

The values of l corresponding to different values of x are recorded. A graph of these data is shown in **Figure 9**.

Figure 9

STEMUP.CO.UK

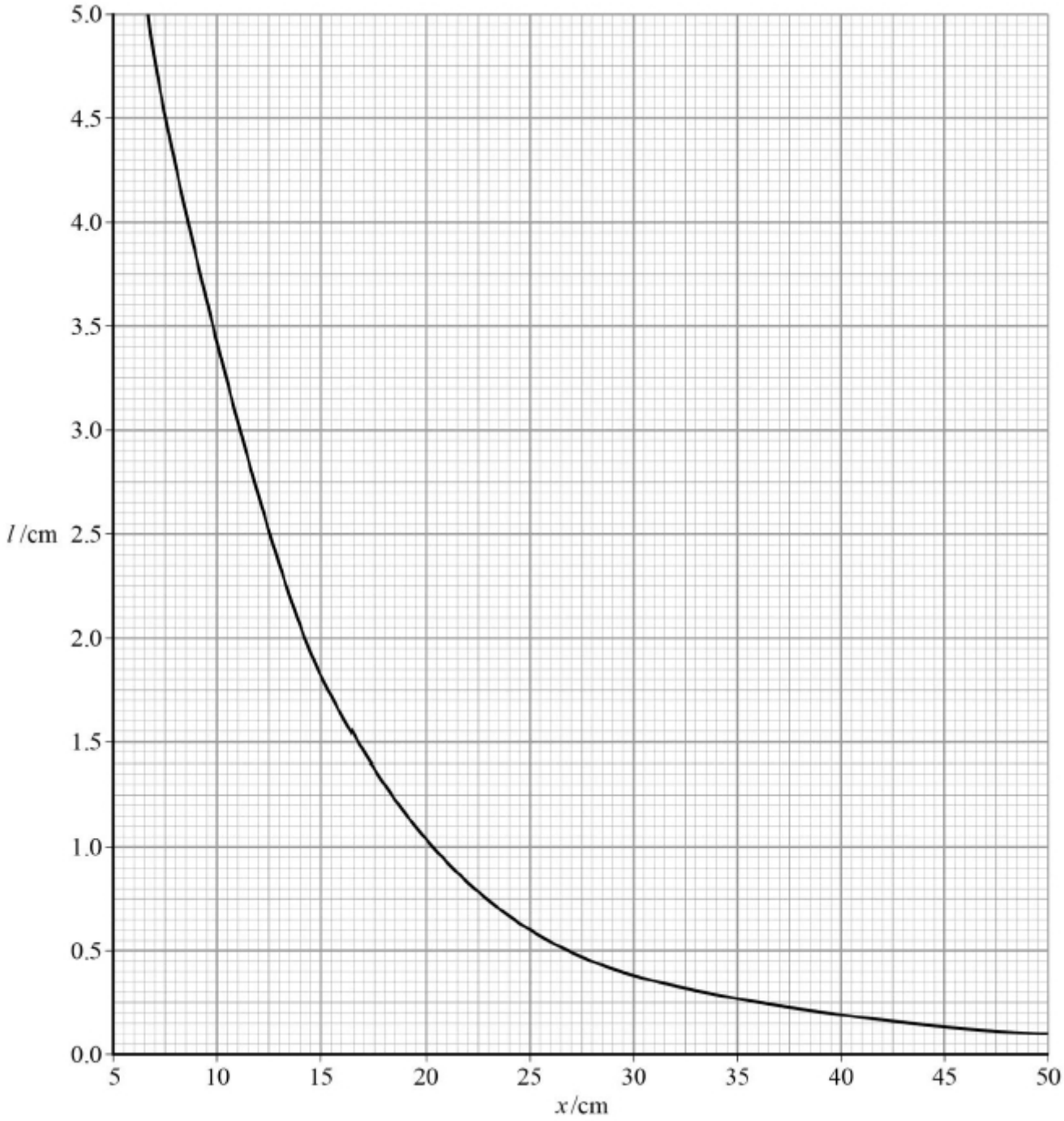

It is suggested that l decreases exponentially as x increases.

Explain whether **Figure 9** supports this suggestion.

_____

_____

_____

_____

(2)

(Total 20 marks)

STEMUP.CO.UK

Q20.

The diagram shows a horizontal conductor of length 50 mm carrying a current of 3.0 A at right angles to a uniform horizontal magnetic field of flux density 0.50 T.

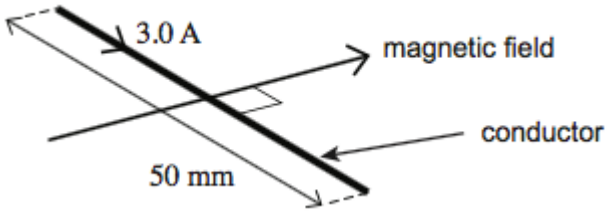

What is the magnitude and direction of the magnetic force on the conductor ?

A 0.075 N vertically upwards
B 0.075 N vertically downwards
C 75 N vertically upwards
D 75 N vertically downwards

(Total 1 mark)

Q21.

The diagram shows a coil placed in a uniform magnetic field. In the position shown, the angle between the normal to the plane of the coil and the magnetic field is $\frac{\pi}{3}$ is rad.

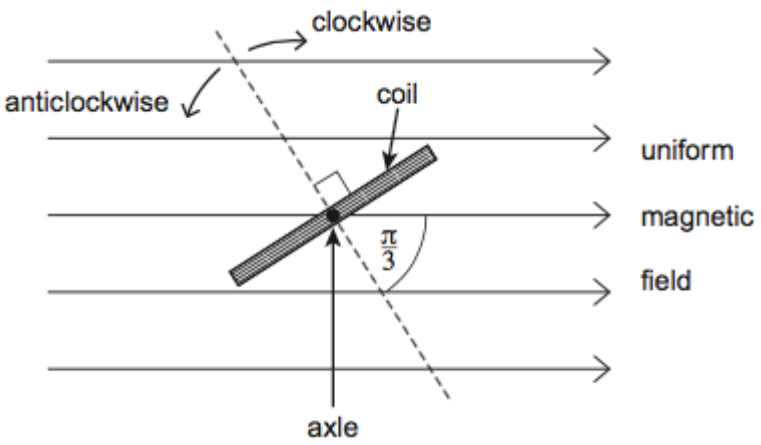

Which line, **A** to **D**, in the table shows the angles through which the coil should be rotated, and the direction of rotation, so that the flux linkage becomes (i) a maximum, and (ii) a minimum?

	Angle of rotation / rad	
	(i) for maximum flux linkage	**(ii) for minimum flux linkage**
A	$\frac{\pi}{6}$ clockwise	$\frac{\pi}{3}$ anticlockwise
B	$\frac{\pi}{6}$ anticlockwise	$\frac{\pi}{3}$ clockwise
C	$\frac{\pi}{3}$ clockwise	$\frac{\pi}{6}$ anticlockwise

STEMUP.CO.UK

D	$\frac{\pi}{3}$ anticlockwise	$\frac{\pi}{6}$ clockwise

(Total 1 mark)

Q22.

A train is travelling at 20 m s^{-1} along a horizontal track through a uniform magnetic field of flux density 4.0×10^{-5} T acting vertically downwards.

What is the emf induced between the ends of an axle 1.5 m long?

A 3.0×10^{-6}V
B 5.3×10^{-4}V
C 1.2×10^{-3}V
D 7.5×10^{5}V

(Total 1 mark)

Q23.

The primary coil of a step-up transformer is connected to a source of alternating pd.
The secondary coil is connected to a lamp.

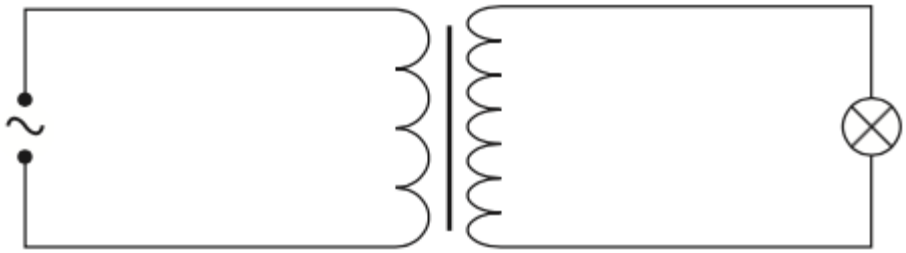

Which line, **A** to **D**, in the table correctly describes the ratios of flux linkages and currents through the secondary coil in relation to the primary coil?

	Secondary magnetic flux linkage / Primary magnetic flux linkage	**Secondary current / Primary current**
A	< 1	< 1
B	> 1	< 1
C	> 1	> 1
D	< 1	> 1

(Total 1 mark)

Q24.

Which one of the following statements is the main reason for operating power lines at high voltage?

A Transformers are never perfectly efficient.
B High voltages are required by many industrial users of electricity.
C Electrical generators produce alternating current.

STEMUP.CO.UK

D For a given amount of transmitted power, increasing the voltage decreases the current.

(Total 1 mark)

Q25.

(a) State, in words, the two laws of electromagnetic induction.

Law 1 _____

_____

_____

_____

Law 2 _____

_____

_____

_____

(3)

(b) The diagram below illustrates the main components of one type of electromagnetic braking system. A metal disc is attached to the rotating axle of a vehicle. An electromagnet is mounted with its pole pieces placed either side of the rotating disc, but not touching it. When the brakes are applied, a direct current is passed through the coil of the electromagnet and the disc slows down.

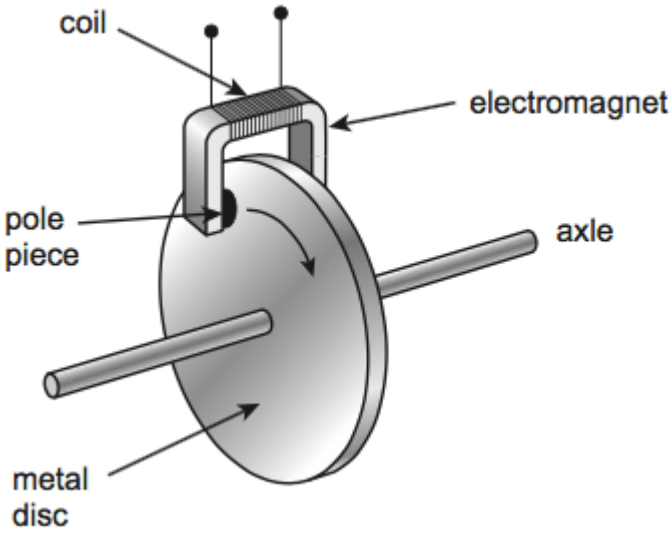

(i) Explain, using the laws of electromagnetic induction, how the device in the diagram acts as an electromagnetic brake.

_____

STEMUP.CO.UK

_____

_____

_____

_____

_____

_____

_____

_____

_____

(3)

(ii) A conventional braking system has friction pads that are brought into contact with a moving metal surface when the vehicle is to be slowed down. State **one** advantage and **one** disadvantage of an electromagnetic brake compared to a conventional brake.

Advantage _____

_____

_____

Disadvantage _____
_

_____

_____

(2)
(Total 8 marks)

Q26.

A metal detector is moved horizontally at a constant speed just above the Earth's surface to search for buried metal objects

Figure 1 shows the coil **C** of a metal detector moving over a circular bracelet made from a single band of metal. The planes of the coil and the bracelet are both horizontal.

Figure 1

STEMUP.CO.UK

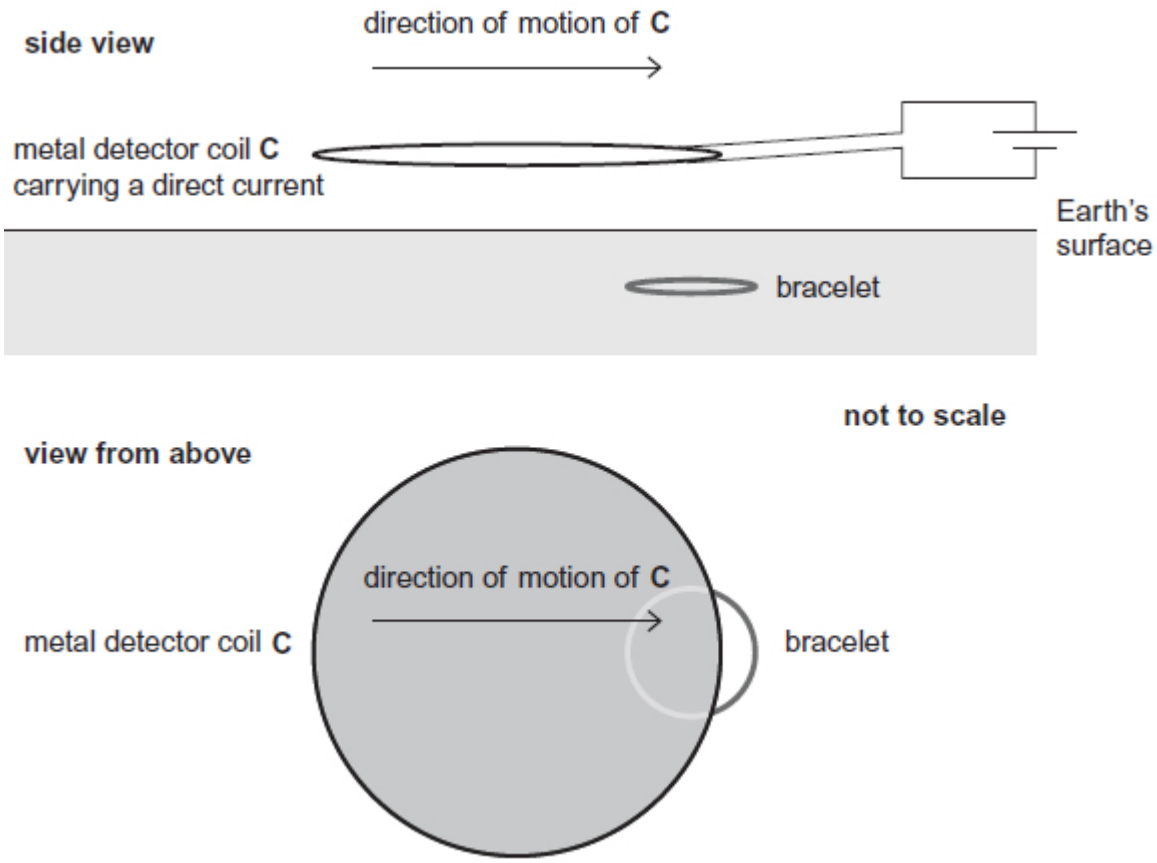

In this metal detector, **C** carries a direct current so that the magnetic flux produced by **C** does not vary. The bracelet is just below the surface, so the flux is perpendicular to the plane of the bracelet. The field is negligible outside the shaded region of **C**.

Figure 2 shows how the magnetic flux through the bracelet varies with time when **C** is moving at a constant velocity.

Figure 2

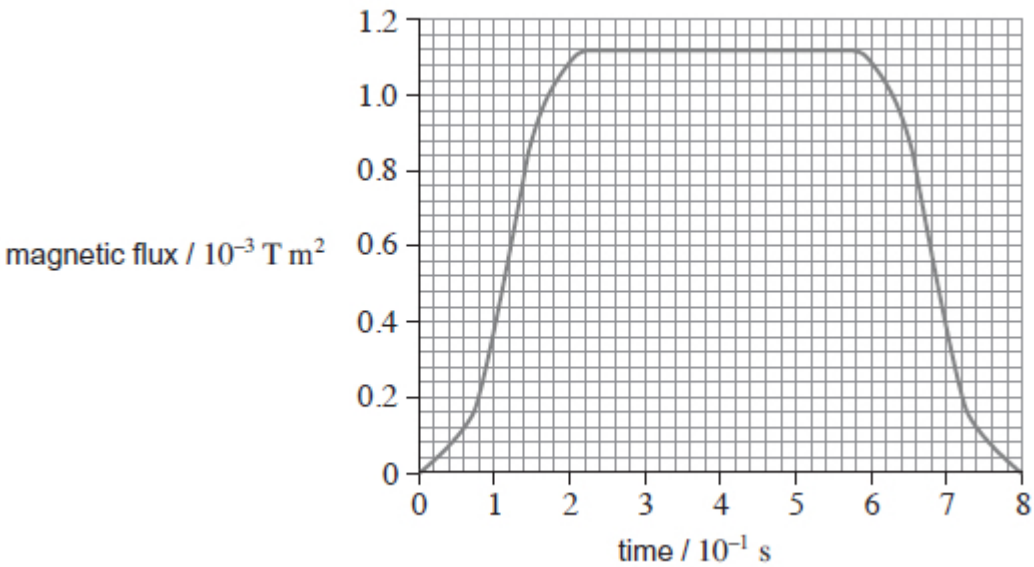

(a) (i) Sketch a graph on the grid to show how the emf induced in the bracelet varies with time as **C** moves across the bracelet. Use the same scale on the time axis as in **Figure 2**.

STEMUP.CO.UK

(3)

(ii) Use the laws of Faraday and Lenz to explain the shape of your graph.

_____

_____

_____

_____

_____

_____

_____

_____

_____

_____

(4)

(b) The velocity at which **C** is moved is 0.28 m s^{-1}.

Show that the diameter of the bracelet is about 6 cm.

(1)

(c) Determine the magnetic flux density of the field produced by **C** at the position of the bracelet.

magnetic flux density _____ T

(2)

STEMUP.CO.UK

(d) Determine the maximum emf induced in the bracelet.

maximum emf _____ V

(3)

(Total 13 marks)

Q27.

The diagram shows a rigidly-clamped straight horizontal current-carrying wire held mid-way between the poles of a magnet on a top-pan balance. The wire is perpendicular to the magnetic field direction.

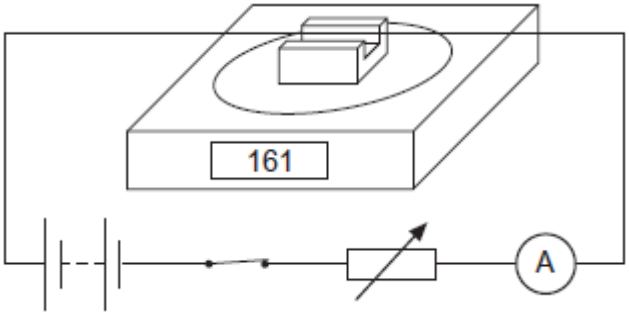

The balance, which was zeroed before the switch was closed, read 161 g after the switch was closed. When the current is reversed and doubled, what would be the new reading on the balance?

A −322 g

B −161 g

C zero

D 322 g

(Total 1 mark)

Q28.

Four rectangular loops of wire **A**, **B**, **C** and **D** are each placed in a uniform magnetic field of the same flux density B. The direction of the magnetic field is parallel to the plane of the loops as shown.

When a current of 1 A is passed through each of the loops, magnetic forces act on them. The lengths of the sides of the loops are as shown.
Which loop experiences the largest couple?

STEMUP.CO.UK

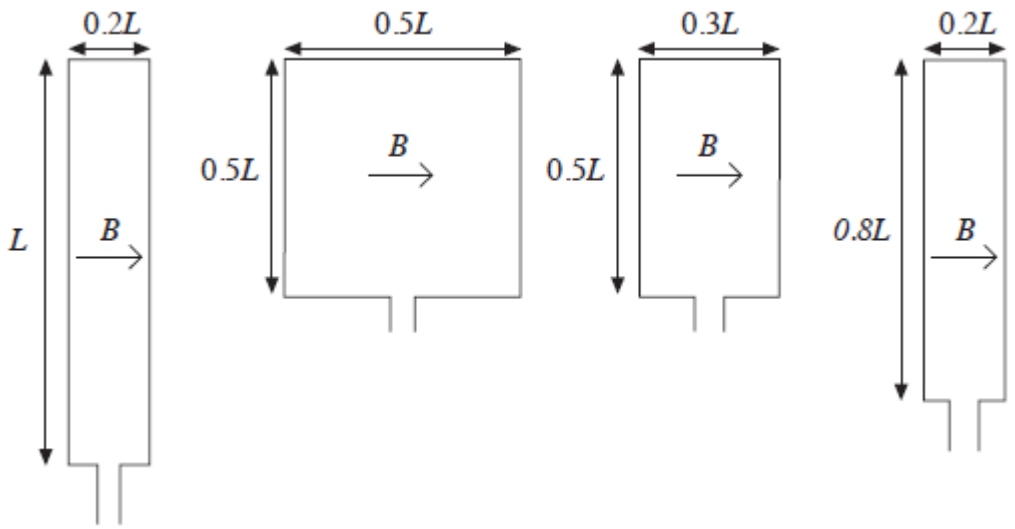

A **B** **C** **D**

(Total 1 mark)

Q29.

Which one of the following statements is correct?

An electron follows a circular path when it is moving at right angles to

A a uniform magnetic field.

B a uniform electric field.

C uniform electric and magnetic fields which are perpendicular.

D uniform electric and magnetic fields which are in opposite directions.

(Total 1 mark)

Q30.

Two electrons, X and Y, travel at right angles to a uniform magnetic field.
X experiences a magnetic force, F_X, and Y experiences a magnetic force, F_Y.

What is the ratio $\frac{F_X}{F_Y}$ if the kinetic energy of X is half that of Y?

A $\frac{1}{4}$

B $\frac{1}{2}$

C $\frac{1}{\sqrt{2}}$

D 1

STEMUP.CO.UK

(Total 1 mark)

Q31.

A lamp rated at 12 V 60 W is connected to the secondary coil of a step-down transformer and is at full brightness. The primary coil is connected to a supply of 230 V. The transformer is 75% efficient.
What is the current in the primary coil?

A 0.25 A

B 0.35 A

C 3.75 A

D 5.0 A

Q32.

(a) **Figure 1** shows two coils, **P** and **Q**, linked by an iron bar. Coil **P** is connected to a battery through a variable resistor and a switch **S**. Coil **Q** is connected to a centre-zero ammeter.

Figure 1

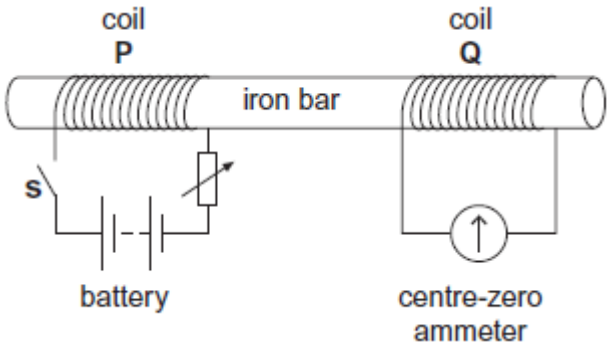

(i) Initially the variable resistor is set to its minimum resistance and **S** is open. Describe and explain what is observed on the ammeter when **S** is closed.

_____

_____

_____

_____

_____

_____

(3)

(ii) With **S** still closed, the resistance of the variable resistor is suddenly increased.
Compare what is now observed on the ammeter with what was observed in part (i).
Explain why this differs from what was observed in part (i).

STEMUP.CO.UK

_____

_____

_____

_____

_____

(2)

(b) **Figure 2** shows a 40-turn coil of cross-sectional area 3.6×10^{-3} m^2 with its plane set at right angles to a uniform magnetic field of flux density 0.42 T.

Figure 2

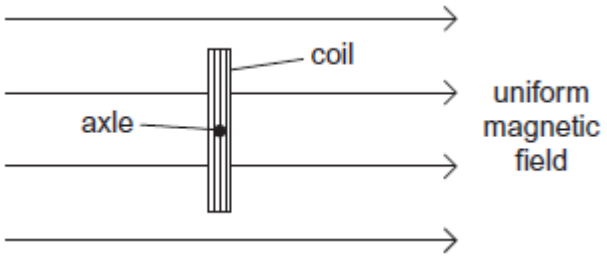

(i) Calculate the magnitude of the magnetic flux linkage for the coil.
State an appropriate unit for your answer.

flux linkage _____ unit _____

(2)

(ii) The coil is rotated through 90° in a time of 0.50 s.
Determine the mean emf in the coil.

mean emf _____ V

(2)

(Total 9 marks)

STEMUP.CO.UK

Q33.

The diagram below shows the main parts of a geophone.

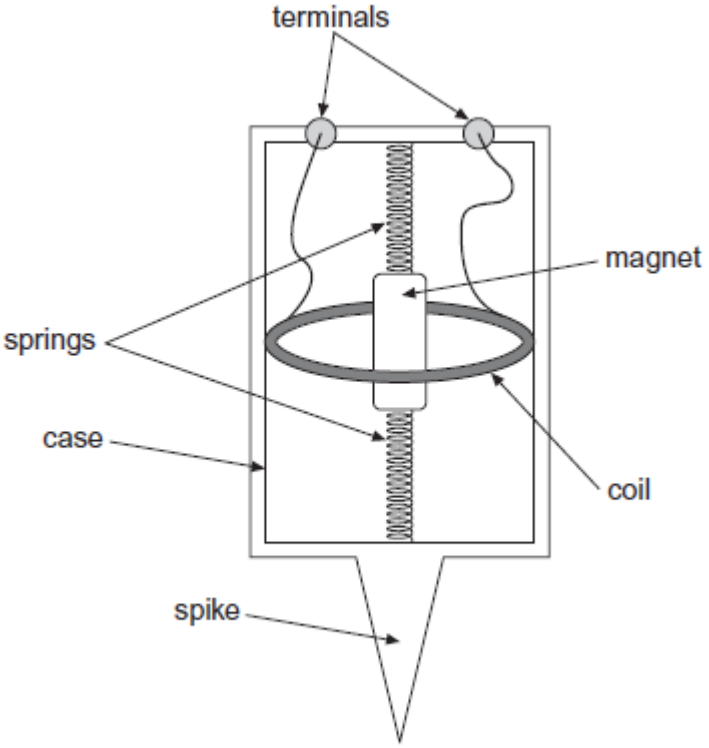

The spike attaches the geophone firmly to the ground. At the instant an earthquake occurs, the case and coil move upwards due to the Earth's movement. The magnet remains stationary due to its inertia. In 3.5 ms, the coil moves from a position where the flux density is 9.0 mT to a position where the flux density is 23.0 mT.

(a) The geophone coil has 250 turns and an area of 12 cm^2.

Calculate the average emf induced in the coil during the first 3.5 ms after the start of the earthquake.

emf _____ V

(3)

(b) Explain how the initial emf induced in the coil of the geophone would be affected:

if the stiffness of the springs were to be increased

_____

STEMUP.CO.UK

if the number of turns on the coil were to be increased.

(2)

(c) (i) The geophone's magnet has a mass of 8.0×10^{-3} kg and the spring stiffness of the system is 2.6 N m^{-1}.

Show that the natural period of oscillation of the mass−spring system is approximately 0.35 s.

(2)

(ii) At the instant that the Earth stops moving after one earthquake, the emf in the coil is at its maximum value of +8 V. The magnet continues to oscillate.

On the grid below, sketch a graph showing the variation of emf with time as the magnet's oscillation decays.
Show at least **three** oscillations.

STEMUP.CO.UK

(3)
(Total 10 marks)

STEMUP.CO.UK

Q1.

(a) The direction of the induced emf (when there is a change of flux linkage) is such that it will (try) to oppose the change (of flux) that is producing it ✓ owtte

A reference to emf is needed rather than induced current as this is dependent on a circuit. Ignore reference to current if emf is given.

1

(b) (The reading shows a dc) current flow which then becomes zero (when the magnet stops moving) ✓

The reading does not have to be steady. So reading increasing or pulsing up before falling to zero is okay. There should be no hint that the reading changes direction.

1

(c) (The induced current produces) a north pole on the right hand side of the coil ✓

which opposes the motion of the bar magnet

OR

and the two north poles repel each other

OR

to try to maintain the (small) magnetic field as the magnet approaches the coil (without this the magnet would increase the magnetic field beside the coil) ✓

The polarity of the coil may be shown on the diagram.

The two marks are independent but the second mark does not stand completely alone as it has to be said in context. EG 'Two North poles repel' on its own will not gain a mark.

2

(d) (Use of $\varepsilon = Blv$ as the straight leading edge of the coil is the only conductor that cuts the magnetic flux lines. Also using $v = s / t$)

$t = Bls/\varepsilon$ ✓

(There must be some evidence of use for the mark but the mark can come from substituting numbers, eg $t = 0.38 \times 0.032 \times 0.032 / 2.9 \times 10^{-4}$)

$t = 1.3(4)$ (s)✓

OR

(Using $\varepsilon = (-)N\,\Delta\varphi/\Delta t$ then $\Delta t = \Delta(BA)/\varepsilon$)

$t = BA/\varepsilon$ ✓

(There must be some evidence of use for the mark but the mark can come from substituting numbers, eg. $t = 0.38 \times .032^2 / 2.9 \times 10^{-4}$)

STEMUP.CO.UK

t = 1.3(4) (s) ✓

Useful numbers BA = 3.89 × 10^{-4}

Although the first mark can come from substituting numbers the equation mark may be lost if it is obvious that the equation is not understood by the way substitutions are made (this does not include a simple AE slip). This loss of a mark is directed at the candidate who quotes several equations and happens to hit on the correct equation but fails to use it properly.

Failure to square the side length is a PE.

Answer only gains 2 marks.

2

(e) (using $\varepsilon = BAN\omega \sin \omega t$ which give a maximum value of $\varepsilon_{max} = BAN\omega$)

ω (= ε_{max} /BAN) = 5.1 × 10^{-3} /(0.38 × $(0.032)^2$. ✓

ω = 13(.1) (rad s^{-1}) ✓

Candidates who cannot maximise/remove sin ωt gain no marks.

{may see ω = 5.1 × 10^{-3} /3.9 × 10^{-4}}.

2

[8]

Q2.

C

[1]

Q3.

C

[1]

Q4.

A

[1]

Q5.

(a) attempt to apply principle of moments either about pivot or (LH) end of ruler $_1$✓

mass = 127(.04) (g) $_2$✓

assumption is that ruler is <u>uniform</u> / <u>mass</u> evenly distributed **OR**

<u>weight</u> acts at the centre/mid-point/middle **OR**

<u>centre of mass</u> / gravity is at the centre/mid-point/middle $_3$✓

for $_1$✓ for evidence of moments taken expect clockwise and anticlockwise moment;

for moment about pivot expect to see either 29 or 49; for use

STEMUP.CO.UK

of LH end of ruler expect 30 or 50

don't insist on seeing masses in kg, distances in m or the inclusion of 9.81 or g in the working; condone g seen on one side only

rounding to 127 g earns $_1$✓ *and* $_2$✓

3

(b) force on wire is upwards **OR** ↑ $_1$✓

current is from **P** to **Q** **OR** rightwards **OR** (left) to (the) right **OR** → $_2$✓

states direction of force and direction of current (or $_3$✓ = 0) and makes a suitably justified deduction, eg

using left-hand rule **OR** LH rule

AND

B is into the page **OR** into plane of **Figure 3 OR** ⊗ $_3$✓

for $_1$✓ *condone 'motion is upwards'*

for $_2$✓ *'towards Q'* ***OR*** *'positive to negative' are not enough*

allow logically correct (using LH rule) $_3$✓ *for either downwards force with correct current* ***AND/OR*** *upwards force with wrong current*

increased flux density below wire is acceptable alternative to LH rule

3

(c) gradient calculated from ΔM divided by ΔI, condone read off errors of ± 1 division; minimum I step ≥ 2.0 A $_1$✓

evidence of g = 9.81 or 9.8 correctly used in working for σ or B $_2$✓

$|B|$ in range 1.76×10^{-2} to 1.87×10^{-2} or 1.8×10^{-2} (T) $_3$✓

for $_1$✓ *expect (–)0.28 (g A*$^{-1}$*); do not penalise for missing – sign*

for $_2$✓ *look for* σ *= their gradient × 9.81 (×* 10^{-3} *N)*

OR $B = \dfrac{\text{their gradient} \times 9.81\left(\times 10^{-3}\right)}{15(\times 10^{-2})}$ *; condone POT errors*

for $_3$✓*CAO by correct method only; ignore – sign if provided; no limit on maximum sf*

3

(d)

	Reduced	No effect	Increased
Force acting on wire		$_1$✓	
Force acting on prism	$_2$✓		
Gradient of graph	$_3$✓		

STEMUP.CO.UK

Vertical intercept	4✓		

1✓ = 1 mark

2✓ = 1 mark

3✓ and 4✓ = 1 mark

allow any distinguishing mark as long as only one per row

for ✓ and ✗ in same row ignore ✗

for ✓ and ✓ in same row give no mark

ignore any crossed-out response unless only distinguishing mark on row

3

(e) any complete circuit connecting the power supply in **Figure 6** to **X** and to **Y** that produces currents in **X** and in **Y** that travel left to right 1✓

wiring correct so that **X** and **Y** are in series (see below) 2✓

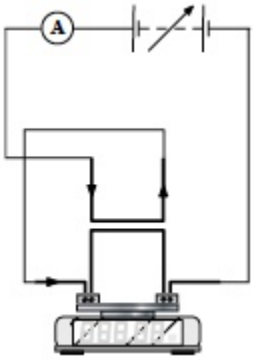

allow parallel circuit for 1✓ but reject use of additional power supply

*if **X** and/or **Y** is/are short-circuited award no marks;*

for impractical circuits eg voltmeter added in series, award no marks

ignore any current arrows added to diagram

2

(f) strategy:

states that readings of M (as the dependent variable) will be measured for different values of independent variable, I or d only 1✓

clearly identifies the correct control variable, d or I only;

condone $\frac{d}{L}$ = constant if I varied **OR** I^2L OR IL = constant if d varied;

it must be clear how the value of the control variable is known 2✓

states that L will be measured or gives value eg L = 5.0 cm 3✓

use of g to convert M reading to F; evidence may be found in expression for k 4✓

for 1✓ condone F identified as the dependent variable or as

STEMUP.CO.UK

the balance reading;

reject 'measure change in mass / change in F'

failure to make M or F the dependent variable cannot score $_1$✓ or $_2$✓

for $_2$✓if d is being varied and I = 5.0 A is stated, this can be taken to mean I is the control variable and the value is known

*for $_1$✓ and for $_3$✓ insist that M and L are being <u>read</u> **OR** <u>measured</u> **OR** <u>recorded</u>*

for $_4$✓ 'work out force' is not enough; reject 'acceleration' for g

MAX 3

analysis:

suggests a plot with M or F [by itself or combined with another factor] on the vertical axis and some <u>valid manipulation</u> of their independent variable on the horizontal axis $_5$✓

identifies correctly how k can be found using the gradient of their graph; k must be the subject of the expression given $_6$✓ **OR**

if suggesting a plot with log M or log F on the vertical axis etc identifying correctly how k can be found from the graph intercept $_6$✓

OR

suggesting a plot with M or F on the vertical axis etc and identifying correctly how k is found using the area under the line $_{56}$ ✓ = 1 MAX

the intention to plot M against I^2 is taken to mean that M is the <u>dependent</u> variable and is plotted on the vertical axis

examples: plot M against I^2 will earn $_5$✓

and then $k = \frac{g \times d \times \text{gradient}}{L}$ *will earn $_6$✓*

or plot F against $\frac{1}{d}$ will earn $_5$✓ and then

$k = \frac{\text{gradient}}{I^2 \times L}$ *will earn $_6$✓ (note that when F is the dependent variable g will not appear in the expression for k)*

2

[19]

Q6.

(a) Vertically up (third row of table) ✓

1

(b) (Using Flemings LHR) the configuration of the letters is S N ✓

Answer must be near / on the dashed lines.

1

STEMUP.CO.UK

(c) The tesla is the (strength) of the magnetic field / flux density that produces a force of 1 newton in a wire of length 1m with 1 ampere (flowing perpendicular to the field). ✓
(owtte but must contain 1N, 1A and 1m)

For mark a reference to 1N, 1A and 1m must be seen. However the word 'unit' is equivalent to '1'.

E.g. unit force = 1N.

Do not allow definitions based on F = Bqv.

1

(d) Use of ($B = F / I\,l$) = $m\,g / I\,l$ ✓ (mark may come from substitution as in next line)

Treat power of 10 error as an AE so lose one mark only.

$B = 0.620 \times 10^{-3} \times 9.81 / (3.43 \times 0.0500) = 0.035$ or 0.036 (T) ✓

Lack of use of 'g' is a PE and scores zero.

2

[5]

Q7.

(a) It is not possible as the force (due to the magnetic field) is perpendicular to the motion / direction of travel / velocity ✓
(it can only change the charged particle's direction or alternatively no work is done on the proton)
Or
No component of force in the direction of motion.

The main part being examined is the reference to the force being perpendicular to the motion.

1

(b) $B\,Q\,v = m\,v^2 / r$ ✓

$t_{\text{semi-circle}}$ (= distance / speed) = $\pi\,r / v$

Or use of t_{circle} (= distance / speed) = $2\,\pi\,r / v$ ✓(this mark can only be awarded if it follows an attempt to answer the first mark)

combining gives

($t_{\text{circle}} = 2\pi\,m / B\,Q$ so)

$t_{\text{semi-circle}} = \pi\,m / B\,Q$

(which does not contain r / is independent of r) ✓

Accept 'e' if used instead of 'Q'

Alternatives can be given for the first two marks.

1st needs a centripetal force term.

2nd is a circular motion expression to enable r to be removed.

3

(c) (rearranging first equation in (b) or from data booklet $v = B\,Q\,r / m$)

$v = 0.44 \times 1.6 \times 10^{-19} \times 0.55 / 1.67 \times 10^{-27}$ ✓

$v = 2.3 \times 10^{7}$ (m s^{-1}) ✓

Correct answer scores both marks.

STEMUP.CO.UK

2

[6]

Q8.

C

[1]

Q9.

(a) Ionisation is when an atom / molecule loses (or gains) one (or more) electrons ✓

1

(b) Potential energy of ion is transferred to kinetic energy of ion✓

Power supply transfers energy to the ion✓

Decrease in energy stored in supply = increase in (kinetic) energy stored by the ion✓

3

(c) electric force is constant✓

magnetic force increases with speed✓

(magnetic force dominates) direction of force predicted by any consistent named force rule✓

3

(d) Path curves upwards between the plates✓

1

(e) The magnetic force is the same (Bqv) ✓

So *r* increases / less curvature✓

OR

$Bqv = \frac{mv^2}{r}$ so $r = \frac{mv}{Bq}$ ✓

v, B, q constant so $r \propto m$ and r increases✓

2

(f) Same path in velocity separator ✓

since Bqv=Eq so v independent of q ✓

In mass selector radius is decreased ✓

since $r = \frac{mv}{Bq}$ so $r \propto \frac{1}{q}$ ✓

Both correct with one correct justification would get 3 marks

MAX 3

STEMUP.CO.UK

[13]

Q10.

(a) the core focuses / directs the magnetic field round to the secondary ✓

Ensures more of the flux from the primary coil links with the secondary coil

1

(b) made from soft iron to allow easy magnetization and demagnetization / reduce hysteresis loss ✓

laminated (structure) to reduce eddy currents ✓

made from high resistivity metal to reduce eddy currents ✓

Do not allow "reduce energy loss" as this is implicit in question.

MAX 2

(c) To produce a continually changing (magnetic) flux in the core✓

1

(d) $N_P = N_S V_P / V_S$ = 300 × 230 / 20 = 3500 (3450) turns ✓

1

(e) efficiency = power out / power in = 65 / (230 × 0.30) ✓

= 0.94 ✓ or 94%

2

[7]

Q11.

B

[1]

Q12.

D

[1]

Q13.

A

[1]

Q14.

(a) period determined from at least 4 cycles, in range 3.8(0) to 5.0(0) × 10^{-4} s ✓

$$\text{frequency} = \frac{1}{\text{period}} \text{ in range } 2300 \pm 300 \text{ Hz}$$ ✓

STEMUP.CO.UK

accept 2 sf period, 2.3 × 10^3 Hz

2

(b) peak to peak voltage = 6.8 divisions seen ✓

rms voltage = 24 mV ✓

accept 24.0 or 24.1 mV

2

(c) flux linked with the search coil depends on the <u>area</u> of coil presented $_1$✓
area is proportional to $d \cos\theta_2$✓

[flux linked with the search coil depends on component of B perpendicular to the plane of the coil$_1$ ✓
component is prop $B \cos\theta$, or suitable sketch]$_2$ ✓

for $_1$✓ accept $N\varphi = BA$

for $_2$✓ accept evidence in sketch, e.g.

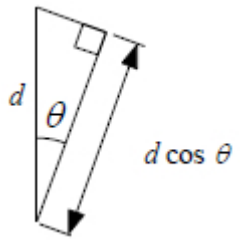

2

(d) six correctly calculated values of $\cos\theta$; accept all to 3 sf or all to 4 sf $_1$✓

axes labelled, correct separator and unit with l, suitable scales $_2$✓

plots correct to half a square (check at least one) $_3$✓

ruled straight line extrapolated to meet either or both axes $_4$✓

[for false plot allow $_2$✓ and $_4$✓ = 2 MAX]

$\theta l°$	l/cm	$\cos\theta$
10	6.7	0.985
34	5.6	0.829
50	4.4	0.643
60	3.4	0.500
72	2.1	0.309
81	1.1	0.156

4

(e) direct proportionality is confirmed since graph is a straight line with zero [negligible] intercept✓

[allow ecf for false plot]

STEMUP.CO.UK

must refer to intercept

1

(f) idea of repositioning trace $_1$✓

(to reposition the trace) so that an end of the line is aligned with [close to] a (horizontal) graduation $_2$✓

(to reposition the trace) so that the line is aligned with the <u>central</u> (vertical) graduation on the screen $_3$✓

associates *y*-shift and *x*-shift correctly with trace change $_4$✓

accept clear marks on Fig 7 for all except 4th point

allow alignment with graduation (can be major or minor) of either end of the line for $_2$✓

4

(g) adjust *y*-voltage gain to a less sensitive [precise] setting [20 mV cm^{-1}] ✓

since *l* is increased beyond the range of the screen [vertical length of trace is too great] ✓

because induced emf is proportional to rate of change of flux linkage [or quotes Faraday's Law] ✓

and rate of change of flux linkage is doubled [same flux change in half the time] ✓

accept 'reduce Y gain' but reject 'use lower Y gain setting'

no credit for suggestions that time-base setting should be changed

answer without quantitative detail 2 MAX

3 MAX

(h) evidence of suitable test employed to test whether curve shows exponential decrease, e.g. valid measurement of half life over more than one region $_1$✓

states that trend is not exponential $_2$✓

cannot earn $_2$✓ *without valid* $_1$✓

2

[20]

Q20.

A

[1]

Q21.

D

[1]

Q22.

C

[1]

STEMUP.CO.UK

Q23.

B

[1]

Q24.

D

[1]

Q25.

(a) *(Faraday's law)*
(induced) emf ∝ rate of change of flux (linkage) ✓
(Lenz's law)
<u>direction of</u> induced emf (or current) ✓
is such as to oppose the change (in flux) producing it ✓

In either order.
Allow "(induced) emf = rate of change of flux linkage".
Ignore incorrect reference to names of laws.

3

(b) (i) current in coil produces magnetic field or flux (that passes through disc) ✓
rotating disc cuts flux inducing / producing emf **or** current (in disc) ✓
induced (eddy) currents (in disc) interact with magnetic field ✓
force on (eddy) currents slows (or opposes) rotation (of disc) ✓

***Alternative** for last two points:*
(eddy) currents in disc cause heating of disc ✓
energy for heating comes from ke of disc or vehicle (which is slowed) ✓

max 3

(ii) *Advantage*: any one ✓
- no material (eg pads or discs or drums) to wear out
- no pads needing replacement
- no additional (or fewer) moving parts

Disadvantage: any one ✓
- ineffective at low speed **or** when stationary
- dependent on vehicle's electrical system remaining in working order
- requires an electrical circuit (or source of electrical energy) to operate whereas pads do not

Answers must refer to advantages and disadvantages of the <u>electromagnetic</u> brake.
Only accept points from these lists.

2

[8]

Q26.

(a) (i) graph showing two pulses one at start and the other at the end with no emf between the pulses

STEMUP.CO.UK

Positive and negative pulses shown

Similar shaped ‘curved’ pulses : negative between 0 and 0.22 ± 0.02 s and positive pulse 0.58 ± 0.02 and 0.8

3

(ii) emf induced when the flux is changing or induced emf depends on the rate of change of flux

emf induced when flux changes between 0 and 0.2(2) s and / or between 0.6(0.58)s and 0.8 s
OR
no change in flux between 0.2 and 0.6 so no induced emf

Induced emf / current produces a field to oppose the change producing it.

Flux linking bracelet increases as the bracelet enters the field produced by C and decreases as it leaves so opposite emfs

4

(b) (Takes 0.21 s or 0.22 s for flux to change from 0 to maximum so)
diameter = 0.28 × 0.21 = 0.059 (0.588) (m)
or 0.28 × 0.22 = 0.062 (0.616) (m)

must be to at least 2sf

1

(c) Area of bracelet = 3.14×0.031^2

$B = 1120 \times 10^{-6} / (3.14 \times 0.031^2) = 0.38$ (T)
$B = 0.40$ T if 3 cm used for radius

Condone incorrect power of 10

Allow answers in range 0.38T to 0.41 T (depends on value used for r)

2

(d) Use of steepest gradient of graph or tangent drawn on Figure 2
Correct data from tangent or points on the steepest part of the graph
10 to 11 mV

3

[13]

Q27.

A

[1]

Q28.

B

[1]

STEMUP.CO.UK

Q29.

A

[1]

Q30.

C

[1]

Q31.

B

[1]

Q32.

(a) (i) meter deflects then returns to zero ✓
current produces (magnetic) field / flux ✓
change in field / flux through Q induces emf ✓
induced emf causes current in Q (and meter) ✓

Deflection to right (condone left) then zero is equivalent to 1st mark.

Accept momentary deflection for 1st point.

"Change in field / flux induces current in Q" is just ✓ from the last two marking points.

max 3

(ii) meter deflects in opposite direction (or to left, or ecf) ✓
field / flux through P is reduced ✓
induces emf / current in opposite direction ✓

Ignore references to magnitude of deflection.

max 2

(b) (i) flux linkage (= $n\Phi = nBA$) = 40 × 0.42 × 3.6 × 10^{-3}
= 6.0(5) × 10^{-2} ✓

Unit mark is independent.

Allow 6 × 10^{-2}.

Wb turns ✓

Accept 60 mWb turns if this unit is made clear.

Unit: allow Wb.

2

(ii) change in flux linkage = $\Delta(n\Phi)$= 6.05 × 10^{-2} (Wb turns) ✓

induced emf $\left(=\frac{\Delta(n\phi)}{\Delta t}\right) = \frac{6.05 \times 10^{-2}}{0.50}$ = 0.12(1) (V) ✓

Essential to appreciate that 6.05 × 10^{-2} is change in flux linkage for 1st mark. Otherwise mark to max 1.

2

[9]

STEMUP.CO.UK

Q33.

(a) emf = $\Delta(BAN) / t$
Change in flux = $A \times \Delta B$ or $12 \times (23 - 9)$ seen

C1

Substitution ignoring powers of 10

C1

1.2 V

A1
3

(b) Reduced

M0

Magnet will move (with the case)

A1

Increased

M0

Flux linkage increases or emf is proportional to N

A1
2

(c) (i) Formula used

$2\pi\sqrt{\frac{8\times10^{-3}}{2.6}}$ seen

B1

0.348 / 0.349 seen to at least 3 sf

B1
2

(ii) Period consistent at 0.35 s or V_o = 8 V

B1

Shape shows decreasing amplitude

M1

At least 3 cycles starting at 8 V

A1
3

[10]

STEMUP.CO.UK

Examiner reports

Q1.

(a) Although a few students quoted Faraday's law of electromagnetic induction or some other rule, a majority gave the impression that they knew about Lenz's law. However, many failed to gain marks due to missing necessary details. The most common was to confuse the word 'opposite' with 'oppose'. A huge number of students wrote that the direction of the emf was opposite to the force, motion or flux change. Also, many students left out a reference to the emf and went straight for "the induced magnetic field opposes the change in flux". It was evident that very weak students did not think about the situation given, but instead tried to remember some law by heart. The sentences written by these students often did not make any sense. Only 21.4% of students gained a mark.

(b) A majority of students (53.9%) gave clear correct answers. Students failed to gain a mark mainly by not being clear about what happens when the magnet stops. To be awarded a mark, it needed to be explicitly stated that the reading falls to zero. Stating that "the dial stops" does not make it clear whether the reading retains its value or falls to zero.

(c) Less than a third of students were aware that it was a repulsion between magnetic fields that provided the opposition to movement. These students generally scored both marks and gave a good explanation. Many other students made statements like "the current is pointing in a direction opposite to the magnets movement, so this shows Lenz's law". They gave an answer in this form to match up with their previously wrong quote of Lenz's law. It appeared as if a majority of students did not appreciate that the opposition to the flux change manifests itself in a physical force that needs to be worked against.

(d) This question was tackled well by two-thirds of students, with the majority choosing to equate the rate of change of flux linkage to the emf. A simple, but common, error was to calculate the area wrongly. The side length was often seen doubled rather than squared.

(e) Students found this more difficult than the previous question (42.8% completely correct). A minority did know the emf equation to use but they could not obtain a maximum value. They failed to replace the trigonometric factor with 1.

Q2.

34.8% correct

Q3.

41.9% correct

Q4.

57.5% correct

Q5.

This question addressed some of the ideas behind required practical activity 10.

(a) Much of the working seen convinced examiners that the students had taken moments about the pivot, although some used 30.0 rather than 29.0 in the calculation. A few forfeited a mark by rounding their result to two significant figures. Weaker students attempted a solution based on proportions of the balance reading shown in Figure 2, while others simply copied the balance reading on to the answer line. While some stated the assumption they made was that the ruler was in equilibrium, examiners were looking for a statement implying that the ruler was uniform or that the centre of mass was at the 50 cm mark. Significant numbers of students gave a creditworthy assumption although those that stated "the ruler has uniform density" or "the mass is in the middle" were unsuccessful. Just over two-thirds of students scored at least one mark.

(b) The key failing of some students here was (surprisingly) that they seemed to think that the current direction was self-evident and not worthy of comment, even if they had correctly deduced the direction of the force (despite some tying themselves in knots with Newton's third law). Some students relied on the examiners spotting relevant annotation made to Figure 3. Statements that the current was 'from positive to negative' or 'clockwise' were not accepted. Unless the directions of the force and the current were both stated, no credit was given for stating the direction of the field. Logically correct deductions, based on incorrect force and/or current directions, could score as long as the left-hand rule was mentioned in support. For these reasons, approximately a third of the students scored one of the three marks and nearly another third scored zero. Thankfully, 17.1% gave a detailed, fully-justified and correct response earning full credit.

(c) Most students recognised that they should find the gradient of the graph in Figure 4 to score the first mark, although a minority predictably failed to spot at least one of the false origins. Some mistakenly thought they should use the information in Figures 2 and 3, and others thought σ was the value of M when the current was 1 A. Correct use of 9.81 earned the second mark for many. While few students failed to correctly insert 5 cm into their calculation for B, most struggled with the various power of ten issues. This discriminated strongly in favour of the better students who could expect to score at least two marks.

(d) The first row of Table 1 attracted the most correct responses and thereafter things got patchier. Examiners needed to see correct responses in both row 3 and row 4 to earn the third marking point; this proved beyond all but the most able, with only 11.4% obtaining full credit.

(e) The need here to get the currents in X and Y travelling from left to right was met in most, but by no means all, solutions by drawing a parallel circuit. However, to guarantee that the currents had the same magnitude, X and Y needed to be in series. This involved a figure-of-eight arrangement; the subtlety of this was lost on all but 7.9% of the students. The majority of diagrams were drawn freehand and were often untidy so that, in some cases, gaps were left and no credit could be earned. The addition of superfluous detail such as a voltmeter sometimes led to unworkable circuits. A surprising proportion of students (11.5%) did not attempt this question.

(f) This was for many the most successful part of the paper, so much so that most students ran out of space in their enthusiasm to set out their solution. There were four marks available for outlining a suitable strategy and students could earn any three of these for maximum credit. In common with the approach on paper 7407/2, examiners insisted on seeing that the dependent variable, correctly identified as m or F, was 'read', 'measured' or 'recorded'. These are the terms examiners expect students to use if similar questions are posed in future papers. Students were split on whether the perpendicular distance d or the current I would be the independent

STEMUP.CO.UK

variable, but were nearly universal in their conviction that the balance reading would be the dependent variable. Despite being told that the pan of the balance moves a negligible amount during use, a few students decided that in varying I they could make d the dependent variable. Some students penalised themselves by overlooking the need to measure the length L of wire X. Others failed to clearly identify the remaining control variable and to state that this too should be measured. A few students thought the balance read the vertical force F directly, but many correctly saw the need to introduce g. The analyses given were impressive and varied; most could explain a relevant graph with m or F involved somewhere on the vertical axis. Examiners took statements such as “plot F against I 2” to mean that F was the dependent variable and would be plotted on the vertical axis, otherwise the use of the gradient to find k could not be verified. Most students gave an expression to show how their gradient could be manipulated to obtain k; examiners expected k to be the subject of this expression. There was strong representation at each mark for this question, from zero to five; 16% of students obtained full credit for their answer.

Q6.

(a) Many students failed to use the concept of Newton III and incorrectly chose the fourth alternative.

(b) More students got this incorrect than got it correct. So again it appeared that errors came in the practical use of Newton’s third law. Some students wrote some side notes referring to Fleming’s left hand rule and they still made errors.

(c) This was the lowest scoring question on the paper. Most students interpreted the question as, ‘What is a tesla equal to?’ Most answers seen were based on formulae that happen to contain B, the magnetic field strength. So an answer such as, ‘The tesla is the force per unit current per unit length’, was one of the better attempts, but even here the tesla is being described in the wrong units. The least able students did not even get this far and simply gave vague answers such as, “it’s used for magnetic fields”.

(d) A majority of students tackled this question with little trouble. The most common error was in failing to convert the mass from g to kg.

Q7.

(a) Most students did not pick-up on the idea that the force is perpendicular to the motion. These students often searched for something to explain the situation, by writing something like, “the magnetic field is static or uniform so it can’t affect the speed”. A few students did know the answer had to do with directions, but only said the magnetic field was perpendicular to the motion, which misses the point.

(b) More than half the students could present the starting equation relating the force due to the magnetic field, to the centripetal force. Many continued to successfully find an expression for the period of motion. However, only some of these referred back to the question to give the time to travel round one semi-circle. Many of the other students got into difficulties if their initial expression for the centripetal force did not involve velocity. From this point on, they often took numerous false trails and the work presented looked very disorganised. Another route taken by some was to reduce their first equation to $R = mv / BQ$ and simply say that this radius does not involve time and is constant. This not only re-writes the question, but misses the point that v is different on each transit.

(c) This calculation was done well by the majority of students. There were also very

STEMUP.CO.UK

few errors shown in the numerical calculations. The weaker scripts either showed students producing the wrong equation, or not rearranging the equation correctly.

Q20.

This question, concerning the magnitude and direction of the force acting on a current-carrying wire in a uniform magnetic field, was the easiest question (facility 88%). Evidently the application of $F = B\,I\,l$ together with Fleming's left hand rule caused few problems.

Q21.

This question required students to decide through what angle (in rad), and in which direction, a coil should be rotated in order to achieve maximum and minimum values of flux linkage. 66% of them were successful. Distractor A, which was almost the exact opposite of the correct answer, was the most popular incorrect response.

Q22.

A straightforward calculation of the emf induced in a moving straight conductor (using $\varepsilon = B\,l\,v$) was all that was needed. 68% of the students did this correctly. One in five of them selected distractor B, which could follow from an incorrect formula or substitution ($\varepsilon = B\,v/l$).

Q23.

This question tested students' knowledge of the flux linkages and currents in the primary and secondary windings of a step-up transformer. The same question had been used in an earlier examination. The facility this time was 54%, up from 46% when used previously.

Q24.

This question, with a facility of 86%, was one of the easiest questions in this test. Students readily appreciated that the real reason that power lines are operated at high voltage is that this reduces the current, hence lowering joule heating losses from the cables.

Q25.

Examiners were looking for precise statements of Faraday's and Lenz's laws, in the most general forms, in part (a). In Faraday's law, for instance, the induced emf is *proportional* to the rate of change of flux, but is *equal* to the rate of change of flux linkage. In statements of Lenz's law it was necessary to refer to the *direction* of the induced emf (or current), and to the *change* producing it, for full credit.

In some cases the operation of the electromagnetic brake in part (b)(i) was well understood, but in most cases it was not. Common errors were to consider the metal disc as a permanent magnet that would induce a current in the coil, or to suggest that the pole pieces would clamp onto the disc in the manner of brake pads, or to consider the current in the coil as an alternating one. Many answers just gained the first mark by understanding that the current in the coil would create a magnetic field across the disc. Recognition of the flux cutting by the rotating disc that would give an emf and current in the disc was much rarer, or less explicit. The exact cause of the force on the disc – the force on the disc's induced currents in the field of the electromagnet – was seldom identified. Attempts to apply Lenz's law were usually much too vague to deserve credit. The retardation of the disc can also be explained by an argument based on energy: the currents in the disc cause heating, dissipating the kinetic energy of the disc and vehicle,

STEMUP.CO.UK

but this approach only appeared in the most exceptional examples.

In part (b)(ii) the clear principal advantage of an electromagnetic brake over the conventional friction brake is that it does not contain parts such as disc pads that wear out, needing replacement. Most students were able to make reference to this, however obscurely. Its clear disadvantage, that the electromagnetic brake becomes less effective as the speed drops, was hardly mentioned at all, but many were able to spot that it relies on an electrical circuit that is functioning.

Q26.

(a) (i) A difficult question for most students who did not realise the emf pulses occur as the bracelet enters and leaves the magnetic flux of the coil.

(ii) Since most of the graphs for (a)(i) were incorrect it was difficult or impossible to explain the shape correctly. However, marks were awarded for correct statements of the Faraday and Lenz laws.

(b) Few students knew how to tackle this one marker. Many incorrect times were chosen.

(c) Some did not read the graph scale correctly, others used $area = \pi d^2$ and there were many power of 10 errors. A final answer of 0.4 T (1 sf) was penalised.

(d) The vast majority of answers incorrectly used the average emf for the first 0.22 s, instead of using the gradient of the steepest part of the graph to find the maximum emf.

Q27.

In this question the students needed to know that reversing the current in a wire placed in a magnetic field would reverse the direction of the force on it, and that doubling the current would double the force. 60% of the responses were correct, up from 41% the last time this question appeared in an examination. The most common incorrect answer was distractor D (22%), where the force would be doubled but not reversed.

Q28.

This question gave the most surprising outcome because, although its facility of 54% was satisfactory, it was a very poor discriminator between the strongest and weakest students. The physics of the question is clear enough: the couple on the coil is proportional to its cross-sectional area. The puzzling outcome may have arisen because 39% of the answers were for distractor A. The ratios of the areas are actually 0.20, 0.25, 0.15 and 0.16 respectively, so why so many students selected 0.20 remains a mystery. Maybe they were put off by the greater length of the long side of the rectangle.

Q29.

This question required students to understand the trajectory of an electron moving in electric and / or magnetic fields. 73% gave a correct response.

Q30.

Calculation of the force acting on electrons moving in magnetic fields in relation to their kinetic energies was the basis of this question. Because the kinetic energy of X is half that of Y, it follows that $v_x = v_y / \sqrt{2}$ and that the ratio of the forces is $1 / \sqrt{2}$. The facility of this

question was 54%; 18% of the students gave distractor A and 23% gave B.

Q31.

This question was a transformer calculation that caused few problems. Its facility was 78% and it discriminated very well.

Q32.

The topic of electromagnetic induction continues to challenge the understanding of A level students, as well as their ability to describe a sequence of processes systematically. Part (a) was set in the context of two coils linked by an iron bar, where the first coil acts as an electromagnet and the second is subject to magnetic flux changes produced by current changes in the electromagnet. Relatively few students stated in part (i) that the centre-zero meter would deflect *and then return to zero* when the current in coil P was switched on. There were frequent references to current flowing through the iron bar from P to Q and also to "ac batteries" and alternating currents. Only the best students described the processes sequentially and coherently: current in P produces magnetic flux, change in flux induces emf in Q, emf causes current in Q and meter, current falls to zero when flux becomes steady.

In part (a)(ii) more answers attempted to address the magnitude of the induced current than its direction. The effect on the magnitude could not in fact be determined, because there is no indication in the question of how rapidly the slider of the resistance is moved. What could be deduced is that a reduction in the electromagnet's current would reduce the flux linkage and that this change would induce an emf in the opposite direction. This would cause a momentary deflection of the ammeter in the opposite direction to that in part (i).

Most students found the calculation of flux linkage in part (b)(i) to be routine. Both marks were usually awarded. The unit of flux linkage caused problems for some. The accepted unit for flux linkage is Wb turns. Some text books omit "turns" (which anyway is a dimensionless quantity) and quote flux linkage values in Wb. Either Wb turns or Wb were therefore considered to be acceptable; derived units such as T m^2 were not. Calculation of the emf induced when the coil was rotated by 90° was required in part (b)(ii). This tempted many students to attempt their solution by using the equation in the data booklet for a uniformly rotating coil, $\boldsymbol{\varepsilon} = BAN\omega \sin\omega t$, which does not apply in this case. Correct solutions should have started from $\boldsymbol{\varepsilon} = \Delta(N\Phi) / \Delta t$, and it should therefore have been clear that the induced emf is derived from the change in flux linkage rather than just one value of flux linkage. Almost inevitably, a few students confused flux with flux linkage.

Q33.

(a) Many candidates omitted the area in the formula, and there was some confusion over powers of 10.

(b) Very few candidates were able to give a satisfactory reason for the reduced emf when the spring stiffness increased. Of those who mentioned the magnet, most stated that it would move less, seemingly unaware that previously it did not move at all.

(c) (i) Well done by most.

(ii) Apart from some poor scripts where no scale was attempted, most answers gained at least 2 marks. The commonest errors were to start the graph at 0 instead of 8V and to draw fewer than 3 cycles.